PLUMBING NOTES

1 IT IS THE INTENT OF THESE SPECIFICATIONS TO PROVIDE A COMPLETE INSTALLATION FOR FINISHED WORK, TESTED AND READY FOR OPERATION. THE WORK THROUGHOUT SHALL BE EXECUTED IN THE BEST AND MOST THOROUGH MANNER UNDER THE DIRECTION OF AND TO THE SATISFACTION OF THE OWNER.

2. ALL MATERIALS REQUIRED FOR THIS WORK SHALL BE NEW, UNUSED, BEST OF ITS RESPECTIVE KINDS, AND FREE FROM DEFECTS AND OF FIRST CLASS QUALITY. BASIS OF QUALITY SHALL BE LATEST STANDARDS OF ASTM, ANSI FEDERAL SPECIFICATIONS OR OTHER ACCEPTABLE STANDARDS.

3. THE PLUMBING CONTRACTOR SHALL BE RESPONSIBLE FOR THEIR WORK UNTIL ITS COMPLETION AND FINAL ACCEPTANCE AND SHALL REPLACE ANY OF THE SAME WHICH MAY BE DAMAGED, LOST OR STOLEN WITHOUT ADDITIONAL COST TO THE OWNER.

4 THE PLUMBING CONTRACTOR SHALL GUARANTEE ALL WORK PERFORMED AND MATERIALS INSTALLED TO BE FREE FROM INHERENT DEFECTS AND SHALL KEEP IN REPAIR AND REPLACE ANY DEFECTIVE MATERIALS OF WORKMANSHIP, FREE OF COST TO THE TENANT (OWNER) FOR A PERIOD OF ONE (1) YEAR AFTER THE OPENING FOR BUSINESS.

5. ALL WORK SHALL BE DONE ACCORDING TO THE REQUIREMENTS OF ALL APPLICABLE CODES AND LEASE CRITERIA (IF APPLICABLE) AND SHALL RECEIVE THE APPROVAL OF ALL AUTHORITIES HAVING JURISDICTION. PREPARE ALL REQUIRED DOCUMENTS, DRAWINGS AND PERFORM ALL REQUIRED TESTS AND PAY ALL REQUIRED CHARGES TO OBTAIN THESE APPROVALS.

6. CONTRACTOR SHALL BE HELD TO HAVE EXAMINED THE SITE FOR THE WORK BEFORE HAVING SUBMITTED A PROPOSAL. NO ADDITIONAL COMPENSATION WILL BE ALLOWED FOR CONDITIONS FOUND DURING THE COURSE OF THE CONTRACT.

7. THIS CONTRACTOR MUST PROVIDE LANDLORD'S CONSTRUCTION REPRESENTATIVE WITH COPIES OF REQUIRED INSURANCE AND COPIES TO BE FURNISHED TO THE OWNER BEFORE COMMENCING WORK

8. SUBMIT THREE (3) SETS OF SHOP DRAWINGS IDENTIFIED WITH PROJECT NAME OF THE FOLLOWING (1) ELECTRIC HOT WATER HEATER OR INSINKERATOR (2) PLUMBING FIXTURES AND TRIM. CONTRACTOR SHALL SUBMIT SHOP DRAWING OF PIPING LAYOUT TO THE OWNER FOR THEIR FILE.

9. THE PLUMBING SUBCONTRACTOR IS A SUBCONTRACTOR OF THE TENANT'S GENERAL CONTRACTOR

10. NOTCHING AND BORING OF STRUCTURAL STEEL MEMBERS IS NOT PERMITTED. WHEN HANGING FROM STRUCTURAL STEEL ONLY HANG FROM TOP FLANGE OF BEAMS AND TOP CHORDS ONLY AT PANEL POINTS OF JOISTS / TRUSSES.

I WORK RESPONSIBILITY

1. FURNISH ALL LABOR, MATERIALS, EQUIPMENT AND CONTRACTORS FOR A COMPLETE, SAFE INSTALLATION OF PLUMBING WORK IN FULL CONFORMITY WITH REQUIREMENTS OF ALL AUTHORITIES HAVING JURISDICTION AS INDICATED ON DRAWINGS AND/OR HEREIN SPECIFIED, INCLUDING IN GENERAL THE FOLLOWING

2 SANITARY DRAINAGE CONNECTIONS TO PLUMBING FIXTURES AND EQUIPMENT REQUIRING SAME WITH FINAL CONNECTIONS TO EXISTING PREINSTALLED OUTLETS PROVIDED BY PRIOR TENANT(S) OR LANDLORD. PLUMBER SHALL VERIFY EXACT LOCATION OF WASTE PIPE OUTLET BEFORE SUBMITTING BID AND NOTIFY THE ARCHITECT OF ANY LOCATION DISCREPANCIES. PLUMBING CONTRACTOR SHALL BE RESPONSIBLE FOR ANY CONCRETE SAWCUTTING REQUIRED TO MAKE THE FINAL CONNECTION TO THE EXISTING WASTE PIPING OR CAPPED OUTLET(S) SAWCUTTING, EXCAVATING, BACKFILLING AND NEW CONCRETE MUST MEET WITH THE LANDLORD'S APPROVAL.
A. SNAKE SANITARY FOR A DISTANCE OF 100 FEET AND REPORT ANY BLOCKAGE.
B. TEST WATER PRESSURE TO INSURE MINIMUM OF 50 PSI

3. COMPLETE VENT SYSTEM, ALL FIXTURES INDIVIDUALLY VENTED WITH FINAL CONNECTION THROUGH ROOF OR TO EXISTING LANDLORD SUPPLIED COMMON VENT ROOF PENETRATION AND FLASHING TO BE PERFORMED BY LANDLORD'S ROOFER (IF APPLICABLE). COST OF ROOF PENETRATION AND FLASHING TO BE PART OF THIS CONTRACT, UNLESS NOTED OTHERWISE IN BID PROPOSAL (IF APPLICABLE).

4. DOMESTIC WATER SUPPLY SYSTEM INCLUDING CONNECTION TO EXISTING CAPPED OUTLET AND FINAL CONNECTIONS TO PLUMBING FIXTURES AND EQUIPMENT REQUIRING SAME. VERIFY EXACT LOCATION AND SIZE BEFORE SUBMITTING BID.

5. INSULATION OF ALL HOT AND COLD WATER PIPING, INCLUDING UNDER LAVATORY A.D.A PIPE WRAPPINGS.

6 FURNISH AND INSTALL WATER METER (IF APPLICABLE) ACCESSIBLE TO UTILITY COMPANY OR LANDLORD'S REPRESENTATIVE FOR MONITORING WATER, BUT METER SHOULD IN NO WAY BE IN THE PATH OF THE A.D.A./CABO-ANSI, 5'-0" CIRCULAR PATTERN.

7. COSTS FOR WORKING BELOW TENANT'S SLAB IN ANOTHER TENANT'S SPACE.

8 INSTALLATION OF FLOOR DRAIN, BACKFLOW PREVENTER (IF REQ. BY CODE) PER LANDLORD REQUIREMENT AND CLEANOUT PER LOCAL CODE. COORDINATE ALL LOCATIONS WITH OPERATIONS MANAGER.

9) COMPLETE NATURAL GAS PIPING SYSTEMS (AS APPLICABLE, REFER TO PLANS)

II. GENERAL ITEMS

1 SLEEVES: PROVIDE #22 GAGE GALVANIZED IRON PIPE SLEEVES FOR PIPING THROUGH WALLS AND FLOOR, PACK WITH NON-ASBESTOS ROPE AND FILL WITH EXPANDO NON-SHRINKING CEMENT.

2 ESCUTCHEONS: PROVIDE EXPOSED PIPING, BOTH BARE AND COVERED, WITH CP CAST BRASS ESCUTCHEONS WHERE PASSING THROUGH FLOORS, CEILINGS, WALLS OR PARTITIONS.

3. HANGERS AND SUPPORTS: SUPPORT HORIZONTAL DRAINAGE PIPING AT LEAST EVERY 5 FEET OR AT EVERY HUB, COPPER TUBING EVERY 7 FEET AND STEEL PIPE EVERY 10 FEET WITH "CLEVIS" HANGERS AND INSULATION PROTECTION SHIELDS. PIPING SHALL NOT BE SUPPORTED FROM BRIDGING OR OTHER PIPING. ONLY SUPPORT FROM TOP FLANGES OF BEAMS AND TOP CHORDS AT PANELS OF JOIST AND TRUSSES. PROVIDE SWAY AND SEISMIC BRACING WHERE REQUIRED BY CODES.

4 TEST: TEST PIPING AND PROVE TIGHT FOR AT LEAST TWO HOURS IN ACCORDANCE WITH REQUIREMENTS OF AUTHORITIES HAVING JURISDICTION AND/OR AS SPECIFIED. TEST SHALL BE PERFORMED IN THE PRESENCE OF OWNER'S REPRESENTATIVE AND LOCAL INSPECTOR. TEST SHALL BE REPEATED IF NECESSARY UNTIL FINAL APPROVAL OF SYSTEM IS OBTAINED.
A. TEST DRAINAGE AND VENT PIPING BY FILLING WITH WATER TO OVERFLOWING AT ROOF, WATER LEVEL TO REMAIN
B. TEST WATER PIPING WITH WATER 1 1/2 TIMES THE WORKING PRESSURE

5 STERILIZATION OF DOMESTIC WATER SYSTEM: BEFORE BEING PLACED IN SERVICE, ALL WATER LINES SHALL BE CHLORINATED TO THE SATISFACTION OF THE ARCHITECT OR LANDLORD'S REPRESENTATIVE, IN ACCORDANCE WITH A.W.W.A SPECIFICATION C651-05

6. SLOPE WASTE LINES 2 INCHES AND SMALLER NOT LESS THAN 1/4 INCH PER FOOT. SLOPE LARGER MAINS NOT LESS THAN 1/8 INCH PER FOOT.

7. INSTALL A CLEANOUT AT BASE OF EACH SOIL STACK, AT EACH CHANGE IN DIRECTION, AT INTERVALS NOT OVER 50 FEET AND ELSEWHERE AS SHOWN ON DRAWINGS OR REQUIRED BY LOCAL CODE. CLEANOUTS SHALL NOT BE INSTALLED IN PUBLIC AREAS WITHOUT SPECIFIC PERMISSION BY TENANT'S CONSTRUCTION MANAGER.

III. MATERIALS

1. DRAINAGE AND VENT PIPING: EXTRA HEAVY HUB AND SPIGOT CAST IRON SOIL WITH RUBBER GASKETS CONFORMING TO ASTM C564. (OR APPROVED EQUAL PER LOCAL AND STATE BUILDING CODES.) NO-HUB CAST IRON TO HAVE HEAVY DUTY, TYPE 304 STAINLESS STEEL COUPLINGS CONFORMING TO ASTM A 666, TYPE 304 STAINLESS STEEL SHIELD, TYPE 304 STAINLESS STEEL BANDS AND SLEEVE.
NPS 1 1/2" TO NPS 4": 3" WIDE SHIELD WITH 4 BANDS;
NPS 5" TO NPS 10": 4" WIDE BAND WITH 6 BANDS

2. WATER PIPING BELOW SLAB: TYPE K HARD COPPER TUBING, WITH CAST BRONZE OR WROUGHT COPPER SOLDER JOINT FITTINGS USING 95-5 SOLDER. WATER PIPING ABOVE SLAB: TYPE L HARD COPPER TUBING USING SILVER SOLDER. ALL WATER SUPPLY PIPING TO CONFORM TO NSF/ANSI 61 AND ASTM B 75, ASTM B 88, ASTM B 251, OR ASTM B 447. ALL PIPE FITTINGS SHALL CONFORM TO ASSE 1061, ASME B 16.15, ASME B 16.18, ASME B 16.22, ASME B 16.23, ASME B 16.26, AND ASME B 16.29.

3. WATER HAMMER ARRESTERS: PROVIDE ON HOT AND COLD WATER BRANCHES TO FIXTURES, J. R. SMITH HYDROTROL MODEL 5020 FOR UP TO 60 FIXTURE UNITS. WATER HAMMER ARRESTERS SHALL CONFORM TO ASSE 1010.

4 VALVES: GATE VALVE WATTS SERIES B-3000, CHECK VALVE WATTS SERIES B-5000, BALL VALVE WATTS SERIES B6080 OR B6081 FULL PORT. ALL VALVES 1/2" TO 2" BRONZE BODY. VALVES SHALL CONFORM TO NSF/ANSI 61.

5. PRESSURE AND TEMPERATURE RELIEF VALVE: WATTS REGULATING CO. MODEL 10L. T&P RELIEF VALVE SHALL CONFORM TO ANSI Z21.22.

6. PRESSURE REDUCING VALVE: WATTS SERIES 25AUB BRONZE BODY WITH INTEGRAL S/S STRAINER, SEALED CAGE FOR 1/2" TO 2 1/2" DIA. TO 300 PSI. PRESSURE REDUCING VALVE SHALL CONFORM TO ASSE 1003.

7. PRESSURE GAUGE: AMETEK DIV. OF U.S. GAUGE SERIES P-500, UP TO 4-1/2" DIAL, 1/4" STEM, ALUMINUM CASE, BLACK FINISH.

8. AIR VENT HOFFMAN #79 WATER MAIN VENT VALVE.

9. WATER METER: HERSEY CO. MODEL 400 SERIES 11S. WATER METER SHALL CONFORM TO ALL APPLICABLE PARTS OF ANSI/AWWA C700 AND NSF/ANSI 61.

10. VACUUM RELIEF VALVE: WATTS MODEL N36-M1 BRASS BODY, 1/2" NPT LINE SIZE. VACUUM RELIEF VALVES SHALL CONFORM TO ANSI Z21.22.

11. EXPANSION TANK AMTROL THERMAL EXPANSION TANK MODEL ST. CONTRACTOR TO VERIFY SIZE REQUIRED FOR EXPANSION TANK PRIOR TO BID. THERMAL EXPANSION TANK TO CONFORM TO NSF/ANSI 61

12 TRAP PRIMER: PRECISION PLUMBING PRODUCTS INC. MODEL P1-500 UP TO FOUR CONNECTIONS. OPTIONAL DISTRIBUTION UNIT REQUIRED FOR 2, 3 AND FOUR DRAIN LINES. TRAP PRIMER TO CONFORM TO ASSE 1018 OR ASSE 1044.

13. MIXING VALVE WATTS SERIES MMV MIXING VALVE, 1/2" LINE SIZE. MIXING VALVE SHALL CONFORM TO ASSE 1017, ASSE 1069 & ASSE 1070.

14. BACKFLOW PREVENTER: ZURN MODEL 975XL2 REDUCED PRESSURE PRINCIPLE ASSEMBLY BACKFLOW PREVENTER. LINE SIZE 3/4" TO 2" TO MATCH INLET WATER LINE SIZE PREVENTER SHALL CONFORM TO ASSE 1013 AND AWWA C511.

IV. INSULATION

1. ALL HOT AND COLD WATER PIPING AND FITTINGS SHALL BE INSULATED WITH 1" THICK RIGID FIBERGLASS WITH VAPOR BARRIER UNIVERSAL JACKET PASTED WITH VAPOR BARRIER CEMENT VAPOR BARRIER NOT REQUIRED ON HOT WATER PIPING.

2. ALL ADA CONFORMING, WHEELCHAIR ACCESSIBLE LAVATORY P-TRAP AND ANGLE VALVE ASSEMBLIES TO BE COVERED WITH THE MOLDED, ANTIMICROBIAL TRUBRO, INC "LAV-GUARD" UNDERSINK PROTECTIVE PIPE COVER MODEL #103.

V. SPECIFIC PLUMBING SPECIFICATIONS

1. INSTALL NEW ONLY IF EXISTING DOES NOT MEET CURRENT ADA/CABO-ANSI (AS APPLICABLE) STANDARDS, OR IS DAMAGED, NOT IN WORKING ORDER OR NOT EXISTING AS APPLICABLE.

2. IT IS THIS CONTRACTOR'S RESPONSIBILITY TO SUPPLY HANDICAPPED TOILET FIXTURES, IF REQUIRED BY CODE OR NOTED ON THE DRAWINGS, UTILIZING THE SPECIFICATION ABOVE AS A STANDARD AND MEETING CODE REQUIREMENTS SPACING OF FIXTURES TO BE COORDINATED WITH THE GENERAL CONTRACTOR AS WELL AS THE PLUMBING INSPECTOR'S REQUIREMENTS.

VI. LANDLORD'S CRITERIA

1. THE PLUMBING CONTRACTOR IS TO BECOME FAMILIARIZED WITH LANDLORD'S CRITERIA FOR THIS LOCATION AND INCLUDE ANY WORK REQUIRED OF THIS CRITERIA, WHICH IS NOT SPECIFICALLY NOTED IN THESE DRAWINGS AND SPECIFICATIONS.

VII. ELASTOMERIC WATERPROOFING MEMBRANE

1. DESCRIPTION: MANUFACTURER'S PROPRIETARY ELASTOMERIC COMPOUND FORMULATED FOR USE AS HEAVY DUTY WATERPROOF MEMBRANE UNDER CERAMIC TILE FLOORS.

2. REQUIRED IN WET AREAS:
a. TOILET ROOMS
b. FLOOR MUST PITCH TO FLOOR DRAIN.

3. ACCEPTABLE MANUFACTURER'S:
a. BOSTIC CONSTRUCTION PRODUCTS, HUNTINGDON VALLEY, PA.
b MAPEI CORPORATION, ELK GROVE VILLAGE, IL
c. THE NOBLE COMPANY, GRAND HAVEN, MI.
d. LATICRETE INTERNATIONAL, BETHANY, CT.

4. INSTALLATION. (2 COATS)
a. INSTALL OVER CURED CEMENT MORTAR BED AND CONCRETE FLOORS AS APPLICABLE, IN STRICT COMPLIANCE WITH MANUFACTURER'S INSTRUCTIONS.
b FLASH MEMBRANE 4" UP ADJACENT WALLS AND RESTRAINING SURFACES AS RECOMMENDED BY MANUFACTURER
c. ALLOW MEMBRANE TO CURE PRIOR TO SETTING TILE.
d. DO NOT ALLOW CONSTRUCTION TRAFFIC ON MEMBRANE.
e MUST BE SLEEVED AND CAULKED

8 PLUMBING NOTES
NTS

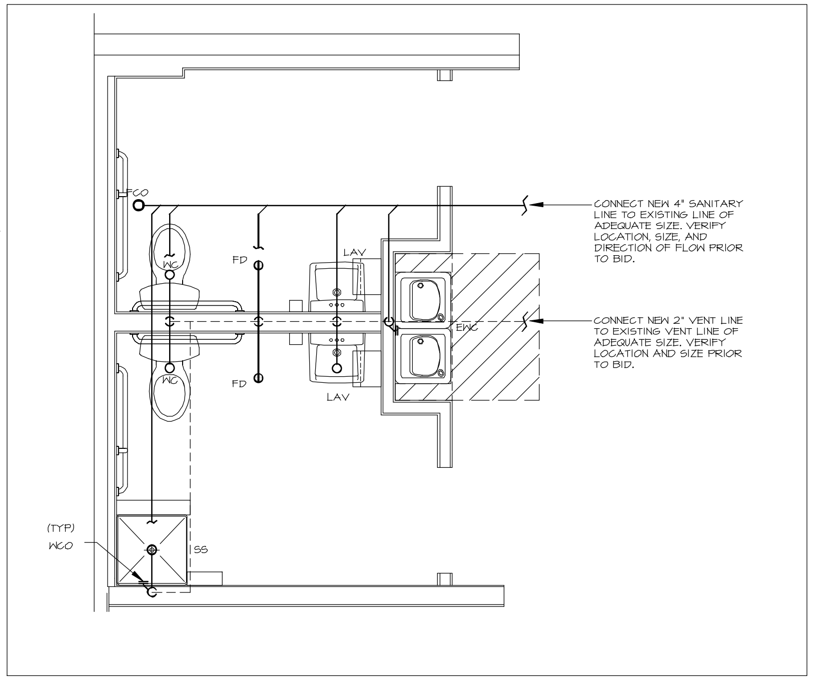

2 SANITARY PLAN
1/2 = 1"

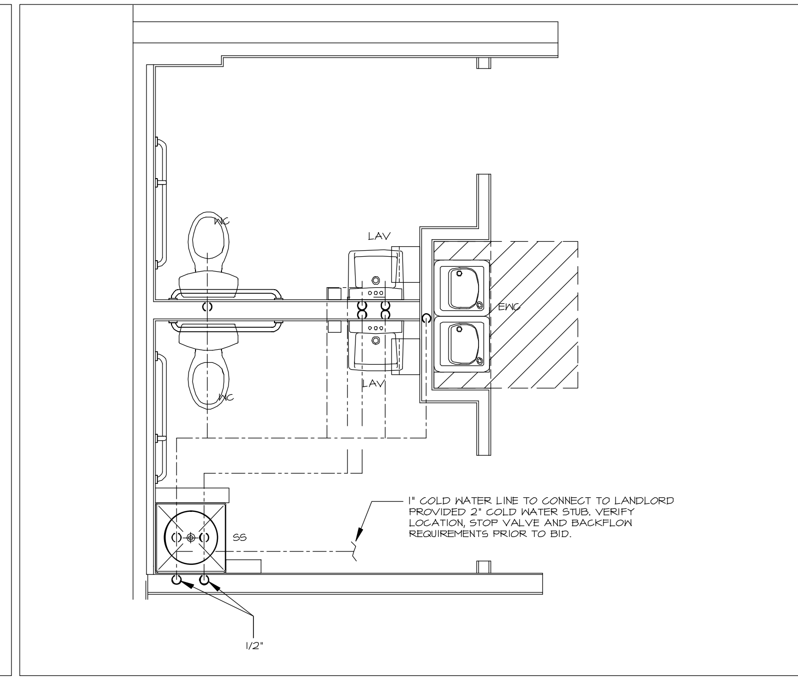

1 WATER SUPPLY PLAN
1/2 = 1"

ISOMETRIC PLUMBING LEGEND			
COLD WATER LINE		HOT WATER LINE	
TEMPERED WATER LINE			
SANITARY LINE		VENT LINE	
WATER METER		GATE VALVES	
BALL VALVES		TRAP PRIMER	
TEMPERATURE PRESSURE-RELIEF VALVE		VACUUM RELIEF VALVE	
MIXING VALVE		WATER HAMMER ARRESTERS	
BACK-FLOW PREVENTER		EXPANSION TANK	

NOTE:
PLUMBING SYSTEM TO BE PROVIDED AND INSTALLED BY LANDLORD.

7 LEGEND
NTS

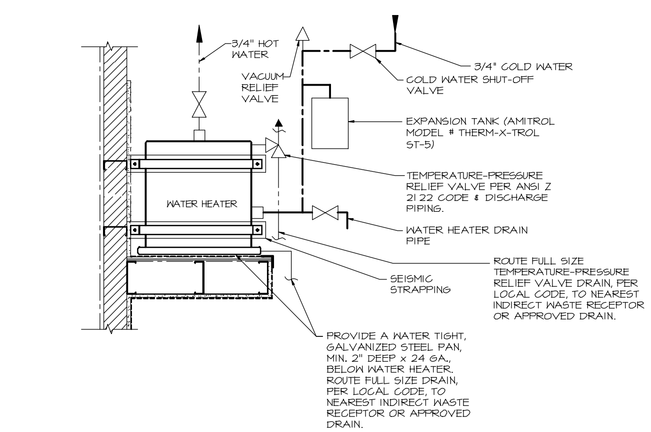

3 WATER HEATER DETAIL
NTS

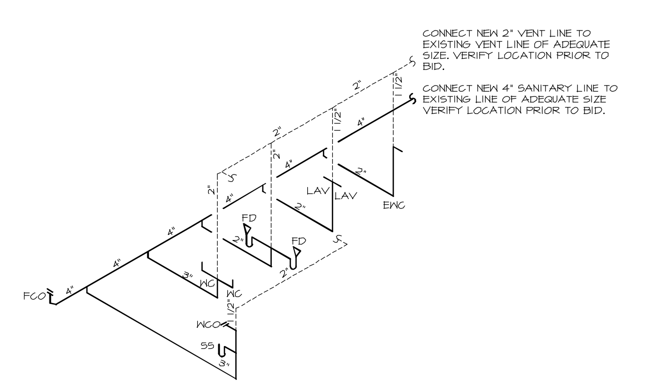

6 SANITARY ISOMETRIC
NTS

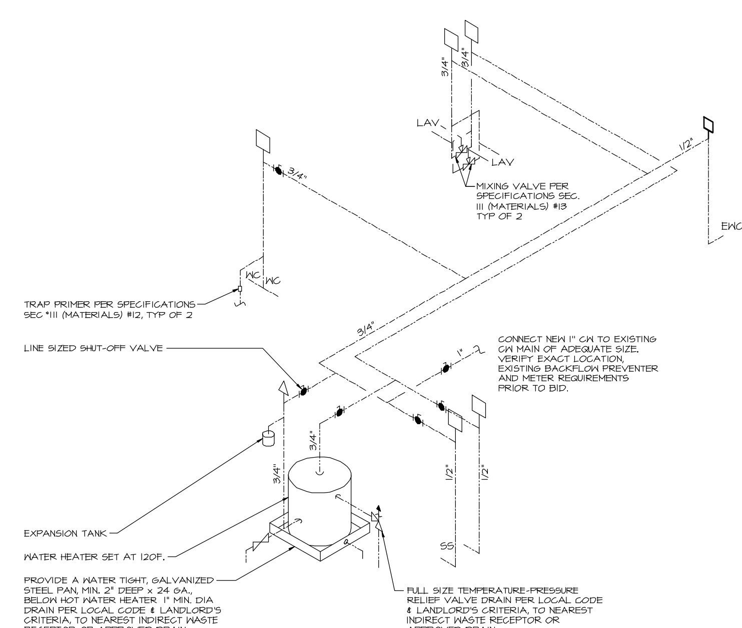

5 WATER SUPPLY ISOMETRIC
NTS

PLUMBING FIXTURE SCHEDULE

NOTE: FIXTURES MAY BE SUBSTITUTED BY AN EQUIVALENT FIXTURE. ALL SUBSTITUTIONS SHALL BE SUBMITTED FOR APPROVAL

MARK	FIXTURE	MANUFACTURER & MODEL NO.	FIXTURE CONNECTIONS CW	HW	W	V	REMARKS
WC	WATER CLOSET	AMERICAN STANDARD NO 2467.016	1/2"	--	4"	2'	INTEGRAL HANDICAP TANK TYPE, ELONGATED WATER SAVER CADET, CHURCH NO. 534.016 SOLID TOP (LID) SEAT, 3/8" C.P. SUPPLY WITH LOOSE KEY STOP, 1.6 GAL. FLUSH - 18" MTG HT TO BOWL, (A.D.A. COMPLIANT).
LAV	LAVATORY	AMERICAN STANDARD NO. 0321.075	1/2"	1/2"	2"	2'	WALL MOUNTED DECLYN VITREOUS CHINA WITH 4" CENTERS, CERAMIX 2000.100 FAUCET NO. 7719.016 GRID DRAIN WITH 1 1/4" T.P., 1 1/4" C.P. 17 GA. "P" TRAP, 3/8" C.P SUPPLIES WITH LOOSE KEY STOPS, JOSAM FLOOR MOUNTED CARRIER, SINGLE LEVER A.D.A. AND ANSI A117.1 APPROVED. INSULATE DRAIN AND SUPPLY LINES WITH 1/2" ARMSTRONG "ARMAFLEX" PIPING INSULATION.
FD	FLOOR DRAIN	JOSAM NO 30003-A-50	1/2"	—	3"	2"	3" WITH NIKALOY STRAINER AND PRIMER TRAP
EWC	ELEC. WATER COOLER	ELKAY MODEL No. EZSTL8C	1/2"	—	2"	2"	FURNISH WITH STANDARD CABINET FINISH, TOUCH PAD ARCHITECT TO SPEC. COLOR.
SS	MOP SINK	CRANE PLUMBING MODEL MSB2424: 24x24x10 MOP BASIN, WHITE.	1/2"	1/2"	3"	2"	FURNISH WITH FIAT #830-AA FAUCET.
EWH	ELEC. WATER HEATER	A.O. SMITH NO. DEL-6 3,000 WATTS	3/4"	3/4"	--	--	RHEEM (OR EQUIVALENT) COMPACT 6 GAL WATER HEATER
F.C.O	FLOOR CLEANOUT	JOSAM SERIES 58360 ADJUSTABLE CLEANOUT. SEE PLUMBING PLAN AND ISOMETRICS FOR SIZE.					
W.C.O	WALL CLEANOUT	JOSAM SERIES 58910 (OR APPROVED EQUIVALENT) TEE CLEANOUT FOR USE IN WALLS. PROVIDE WITH JOSAM SERIES 58600 WALL ACCESS COVER. SEE PLUMBING PLAN AND ISOMETRICS FOR SIZE.					

NOTES:
1. ALL FIXTURES SHALL HAVE AN INDIVIDUAL SHUTOFF VALVE.
2. ALL FIXTURES SHALL BE PROVIDED W/ A SHOKTROL.
3. INSTALL A METER AND/ OR BACKFLOW PREVENTOR AS LOCAL CODE REQUIRES.

4 PLUMBING SCHEDULE
NTS

pdmsdesign.com
pdms design group
2225 E. Randol Mill Road, Suite 300
Arlington, Texas 76011
817.633.4200 p 817.633.4153 f

This document contains information proprietary to PDMS Design Group and is furnished in confidence for the limited purpose of evaluation, bidding, review, or construction. This document or its contents may not be used for any other purpose and may not be reproduced or disclosed to others without the prior written consent of PDMS Design Group

CONSULTANTS

DR
DANIEL A. REEVES, P.E.
2225 E. Randol Mill Rd, Suite 300
Arlington, TX 76011
(817)701-4808
FAX (817)633-4153
Texas Professional Eng. #97463

SEAL

PDMS DESIGN GROUP
F-4255

DATE ISSUE

1	10/13/17	CITY/CUST. COMMENTS
△	DATE	REVISION

PROJECT NAME / LOCATION

five BELOW
ARBOR PARK SHOPPING CENTER
17700 SAN PEDRO AVE, SUITE 702
SAN ANTONIO, TX 78232

PROJECT INFORMATION

DATE: 09-07-17
PROJECT NO. 170128
DELIVERY TYPE: V-BOX
DRAWN BY: JC
CHECKED BY: DAR

SHEET TITLE / NUMBER

PLUMBING PLAN, NOTES, RISER DIAGRAM & SPECIFICATIONS

P1.0