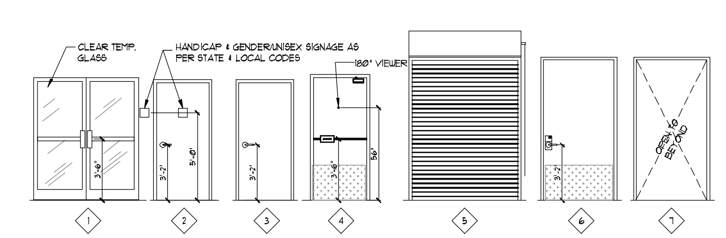

1 DOOR TYPES

A. ALL HARDWARE LISTED BELOW SHALL BE SUPPLIED BY L.L., UNLESS OTHERWISE NOTED

B. ALL HARDWARE SHALL HAVE SATIN CHROME FINISH, UNLESS OTHERWISE NOTED.

C. OPENING SHALL BE MINIMUM OF 32" WIDE WHEN DOORS ARE AT A RIGHT ANGLE TO THE CLOSED POSITION.

D. MAX EFFORT TO OPERATE DOOR SHALL NOT EXCEED 8.5 POINTS FOR EXTERIOR DOORS AND 3 POUNDS FOR INTERIOR DOORS WITH A PULL OF PUSH EFFORT BEING APPLIED AT RIGHT ANGLES TO HINGED DOORS AND AT THE CENTER PLANE OF SLIDING OR FOLDING DOORS. COMPENSATING DEVICES OR AUTOMATIC DOOR OPERATIONS MAY BE UTILIZED TO MEET THE ABOVE STANDARDS. WHEN FIRE DOORS ARE REQUIRED, THE MAX EFFORT TO OPERATE THE DOORWAY MAY BE INCREASED NOT TO EXCEED 14 POUNDS WITH CLOSURE.

E. INTERIOR METAL DOORS SHALL BE 20 GA. ALL EXTERIOR DOORS SHALL BE 18 GA.

F. HAND ACTIVATED DOOR OPENING HARDWARE SHALL BE CENTERED BETWEEN 30" AND 44" ABOVE THE FINISHED FLOOR.

A DOOR/HARDWARE NOTES

SET# 1A - SALES/CORRIDOR DOOR / SET# 1B - CORRIDOR STOCKROOM DOOR

CLOSER: NORTON #8501-H, HINGE SIDE MTD, (SET TO BE 5LB. MAX OPENING FORCE) ADJUST MOUNTING POINTS FOR MIN. 120° ROTATION.

HINGES: HAGER AB850, 1-½ PAIR STAINLESS STEEL MARKAR, ASSA ABLOY HINGE #B1923, SUPPORT PIVOT, US2G.

PULL 1A: HAGER 4"x16" #31J, PULL PLATE W/#1J PULL, STAINLESS #4 FINISHED METAL (SALES/CORRIDOR)

PUSH 1A: HAGER 4:x16" #30S PUSH PLATE STAINLESS #4 FINISHED METAL W/ STAINLESS #4. FINISHED METAL COUNTERSUNK SCREWS (SALES/CORRIDOR).

LOCK 1B: KABA-E-PLEX 2000 SERIES W/ POWERSTAR OPTION, 7-PIN BEST ACCEPTABLE CORE, SATIN CHROME FINISH. *USED ONLY ON CORRIDOR/STOCKROOM DOOR WHEN EGRESS CORRIDORS ARE REQ'D & SHOWN ON PLAN.

STOP: IVES #445 WALL MTD. OR #446 FLOOR MTD. AS REQ'D US26D

KICK PLATE: 46"x24" 16 GA. KICK PLATE. INSTALL W/S.S. COUNTERSUNK SCREWS ON PUSH SIDE.

SILENCER: RESILIENT TYPE, REMOVABLE FOR REPLACEMENT, 3 EACH DOOR, MTD. IN FRAME.

SMOKE SEAL: 'PEMKO' #588D (USE AT RATED DOORS ONLY)

FOOT: HOLD OPEN FOOT, HAGER 270D- US26D

SET #2A - TOILET, #2B - MANAGER'S OFFICE, #2C - EXCESS AREA/ BREAKROOM DOORS

HINGES: HAGER AB850, 1-½ PAIR STAINLESS STEEL.

LOCK 2A: STANLEY MANUF. - BEST 9K3-0-L-15-STK-626 (26D) (TOILET)

LOCK 2B: STANLEY MANUF. - BEST 9K3-7-AB-15D-STK-626 (26D) (MANAGER'S & EXCESS AREA)

LOCK 2C: KABA-E-PLEX 2000 SERIES WITH POWERSTAR OPTION, 7-PIN BEST ACCEPTABLE CORE, SATIN CHROME FINISH (BREAKROOM)

STOP: IVES #438 FLOOR MTD. W/ RISER AS REQ'D., US26D

SILENCER: RESILIENT TYPE, REMOVABLE FOR REPLACEMENT, 3 EACH DOOR, MOUNTED IN FRAME.

FOOT: HOLD OPEN FOOT, HAGER 270D- US26D. * ONLY INSTALL IN LOCATIONS WHERE CLOSERS

EXCESS STORAGE AREAS THAT CONTAIN THE SPACE'S ELECTRICAL PANELS MAY REQUIRE A KNOX BOX AND A SIGN STATING 'ELECTRICAL ROOM' FOR THE FIRE DEPARTMENT'S ACCESS. CONFIRM WITH LOCAL JURISDICTIONS PRIOR TO PURCHASE AND INSTALLATION

SET# 3 - EXIT DOOR WITH PANIC HARDWARE

CLOSER: NORTON #8501-H, HINGE SIDE MTD, HOLD-OPEN OPERATION. (SET TO BE 5LB. MAX OPENING FORCE) INCLUDE HOLD OPEN CLOSER, TYP. OF 1. *NEW CLOSER TO BE INSTALLED ON ALL (E) DOORS. ADJUST MOUNTING POINTS FOR MIN. 120° ROTATION.

HINGES: HAGER AB850, 1-½ PAIR STAINLESS STEEL MARKAR, ASSA ABLOY HINGE #B1923, SUPPORT PIVOT, US2G.

EXIT DEVICE: ALARM EXIT DEVICE
SINGLE DOOR: DETEX #V40xEBxW, WEATHERIZED ALARMED RIM.
DOUBLE DOOR: DETEX #V40xEBxW, WEATHERIZED ALARMED RIM EXIT DEVICE DDH-2250 & 94 DOUBLE DOOR STRIKE (ACTIVE & INACTIVE LEAF) VERTICAL ROD EXIT DEVICE EXIT DEVICE TO HAVE '7-PIN' BEST ACCEPTABLE CYLINDER.
NEW EXIT DEVICE TO BE INSTALLED ON ALL

STOP: HAGER 270C IVES #438 FLOOR MTD. WITH RISER AS REQ'D, US26D.

KICK PLATE: 46"x24" 16 GA. KICK PLATE. INSTALL W/S.S. COUNTERSUNK SCREWS ON PUSH SIDE. *VERIFY SIZE WITH DOOR SIZE.

SILENCER: RESILIENT TYPE, REMOVABLE FOR REPLACEMENT, 3 EACH DOOR, MTD. IN FRAME.

SMOKE SEAL: 'PEMKO' #588D (USE AT RATED DOORS ONLY)

FOOT: HOLD OPEN FOOT, HAGER 270D- US26D

WEATHERING: ALUM/ STEEL THRESHOLD COMPLETE WITH WEATHER-STRIPPING AND SMOKE GASKET. (EXTERIOR DOORS)

SECURITY: SECURITY ASTRAGAL, NATIONAL GUARD PRODUCTS #139SP FULL HT. OF DOOR, INSTALL W/ SECURITY SCREWS

VIEWER: 180 DEGREE VIEWER - HAGER 1755

CHAIN HOLD: HAGER DOOR CHAIN - #300D-25 ½" - US26D

SET# 4 - ENTRY DOORS

CLOSER: NORTON #8501-H, OR APPROVED EQ. ADJUST MOUNTING POINTS FOR MIN. 120° ROTATION. *NEW CLOSER TO BE INSTALLED ON ALL (E) DOORS

PULL: HAGER PULL #P4E, 32D OR APPROVED EQ.

PUSH: HAGER PUSH #130S, 32D OR APPROVED EQ.

LOCK: 7 PIN BEST ACCEPTABLE CYLINDER W/ TEE TURN INSIDE & EXTERIOR CYLINDER GUARD, MAJOR MANUF. #CGL-26D *NO LOCKSET TO BE INSTALLED ON INERIOR VESTIBULE DOORS, WHEN VESTIBULE IS INSTALLED.

STOP: HAGER 268S - FINISH TO MATCH STOREFRONT. *DOOR STOP USED ON INTERIOR VESTIBULES DOORS ONLY, AS REQ'D.

FOOT: HOLD OPEN FOOT, HAGER 270D- US26D. FINISH TO MATCH STOREFRONT. *HOLD OPEN ON EXTERIOR DOOR ONLY.

WEATHERING: PER MANUF. SPECS, INCLUDING FLOOR SWEEPS.

CHAIN HOLD: HAGER - DOOR CHAIN - #300D-25 ½" - US26D

THRESHOLD: 8" STANDARD MILL FINISHED THRESHOLD. *NEW THRESHOLD TO BE INSTALLED ON ALL (E) DOORS. *NO THRESHOLD TO BE INSTALLED ON INTERIOR VESTIBULE DOORS. *T.G.C. TO CLEAN THRESHOLD PRIOR TO WALK-THRU.

SET# 5 EXTERIOR ROLL-UP DOOR

MANUF.: COILING STEEL DOOR BY OVERHEAD DOOR - SERIES 625 24 GAUGE INSULATED DOOR IN FACTORY GRAY BAKED ENAMEL

LOCK: (2) THROW BOLTS PER MANUF. *PAD LOCK PROV. BY FB & INST. BY T.G.C. W/ BEST CORE. KEY TO MATCH MANAGER'S OFFICE.

OPERATION: MANUAL - CHAIN HOIST

SPECS: 3" STRUCTURAL STEEL DOOR ANGLE GUIDES WITH ALUMINUM BOTTOM BAR W/ BULB TYPE WEATHER SEAL.

WEATHERING: HOOD BAFFLE SHALL BE INSTALLED DIRECTLY TO THE INSIDE FACE OF THE MASONRY WALL & SILICONE CAULKED AROUND THE ENTIRE PERIMETER. INSTALL AN EXTERIOR LINTEL BRUSH SEAL TO LINTEL (WOOD BLOCKING SHALL NOT BE USED)

SET# 6 - INTERIOR ROLL-UP DOOR

MANUF.: QMI SECURITY SOLUTIONS, "STORESAFE" (IRD) SOLID ALUMINUM SHUTTER, CURTAIN PROFILE: AL7-E EXTRUDED ALUMINUM SINGLE WALL,

COLOR: GRAY

LOCK: (2) THROW BOLTS PER MANUF. *PAD LOCK PROV. BY FB & INST. BY T.G.C. W/ BEST CORE. KEY TO MATCH MANAGER'S OFFICE.

OPERATION: MANUAL - CHAIN HOIST FUSIBLE LINK TIED INTO FIRE SYSTEM WHEN REQ'D.

SPECS: 3" STRUCTURAL STEEL DOOR ANGLE GUIDES WITH ALUMINUM BOTTOM BAR W/ BULB TYPE WEATHER SEAL.

WEATHERING: HOOD BAFFLE SHALL BE INSTALLED DIRECTLY TO THE INSIDE FACE OF THE MASONRY WALL & SILICONE CAULKED AROUND THE ENTIRE PERIMETER. INSTALL AN EXTERIOR LINTEL BRUSH SEAL TO LINTEL (WOOD BLOCKING SHALL NOT BE USED)

OPEN

NOTE:
GENERAL CONTRACTOR TO SUPPLY 'BEST 7-PIN CONSTRUCTION' CORES ON ALL LOCKING DOORS WITH CONTROL KEY AND OPERATING KEY

2 DOOR HARDWARE SPECS

DOOR	LOCATION		DOOR				FRAME	FINISHES		
NO.	ROOM NAME	TYPE	THICKNESS	MATERIAL	LABEL	DOOR SIZE	JAMB	DOOR FINISH	HARDWARE SET	REMARKS
1	STOREFRONT ENTRY	1	N/A	STOREFRONT	-	(2) 3'-0"x7'-0"	-	CLEAR ANODIZED	#4	SUPPLIED & INSTALLED BY L.L. ADJUST CLOSER FOR A 120 DEGREE ROTATION
2	SALES/CORRIDOR	7	N/A	N/A	-	4'-0"x8'-0" FRAMED OPENNG	4B/A5.0	P-2	#1A	SUPPLIED & INSTALLED BY L.L. PLACE HOLLOW METAL DOOR IN STOCKROOM
3	TOILET ROOM	2	1 3/4"	HOLLOW METAL	-	3'-0"x6'-8"	4/A5.0	P-2	#2A	SUPPLIED & INSTALLED BY L.L.
4	TOILET ROOM	2	1 3/4"	HOLLOW METAL	-	3'-0"x6'-8"	4/A5.0	P-2	#2A	SUPPLIED & INSTALLED BY L.L.
5	EGRESS DOOR	4	1 3/4"	HOLLOW METAL	-	3'-0"x7'-0"	4A/A5.0	P-2	#3	SUPPLIED & INSTALLED BY L.L. ADJUST CLOSER FOR A 120 DEGREE ROTATION
6	CORRIDOR/STOCK	6	1 3/4"	HOLLOW METAL	-	4'-0"x8'-0"	4A/A5.0	P-2	#1B	SUPPLIED & INSTALLED BY L.L. ADJUST CLOSER TO A 120 DEGREE ROTATION
7	MANAGERS OFFICE	3	1 3/4"	HOLLOW METAL	-	3'-0"x6'-8"	4A/A5.0	P-2	#2B	SUPPLIED & INSTALLED BY L.L.
8	OVERHEAD ROLL-UP DOOR	5	- -	STEEL	-	6'-0"x8'-6"	5A/A5.0	FACTORY	#5	SUPPLIED & INSTALLED WITH R-19 INSULATION, BY L.L. F.B. TO PROV. & T.G.C. TO INSTALL PADLOCK
9	EXCESS SPACE	3	1-3/4"	HOLLOW METAL	-	4'-0"x8'-0"	4A/A5.0	P-2	#2C	SUPPLIED & INSTALLED BY L.L. ADJUST CLOSER FOR A 120 DEGREE ROTATION

3 DOOR SCHEDULE

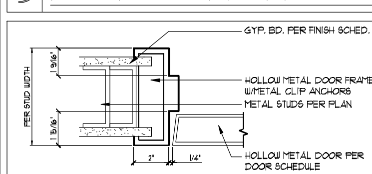

4 JAMB/HEAD DTL. SCALE 3"=1'-0"

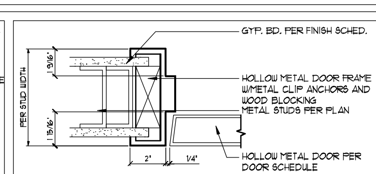

*USED AT CORRIDOR/ STOCKROOM DOOR AND MANAGERS OFFICE DOOR ONLY

4A JAMB/HEAD DTL. SCALE 3"=1'-0"

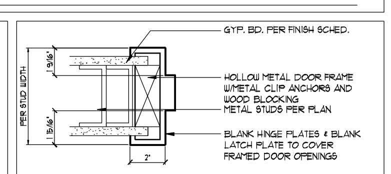

*USED AT SALES/ CORRIDOR FRAMED OPENING ONLY

4B JAMB/HEAD DTL. SCALE 3"=1'-0"

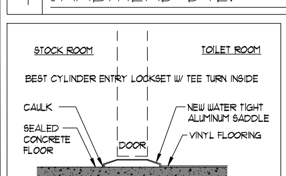

5 TRANS. DTL. SCALE 1 ½"=1'-0"

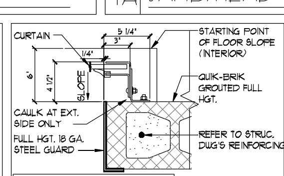

5A JAMB DTL. SCALE 1 ½"=1'-0"

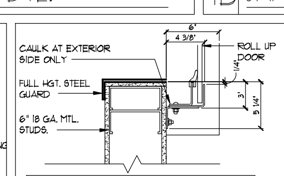

5B JAMB DTL. SCALE 1 ½"=1'-0"

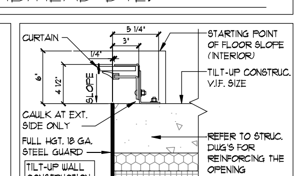

5C JAMB DTL. SCALE 1 ½"=1'-0"

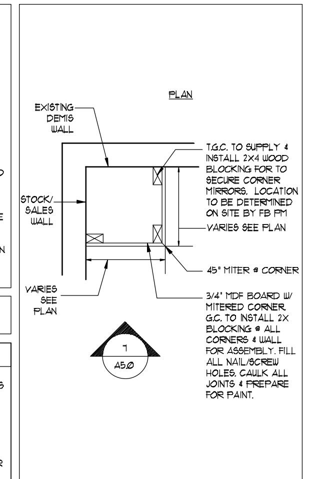

6 CORNER FILLER DTL-1

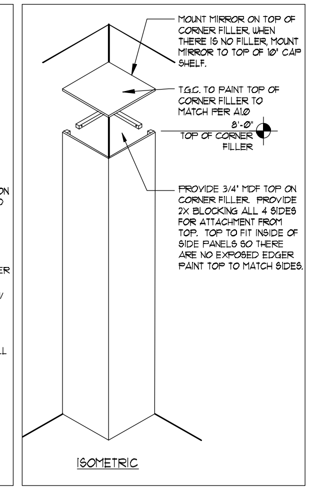

7 CORNER FILLER DTL-2

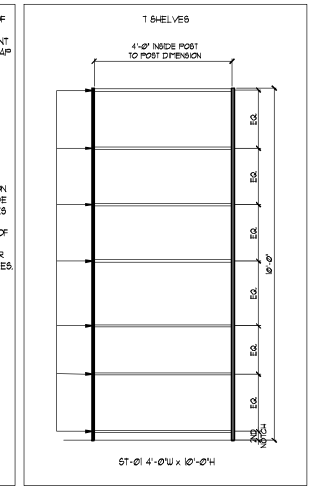

8 STOCK SHELF ELEV.

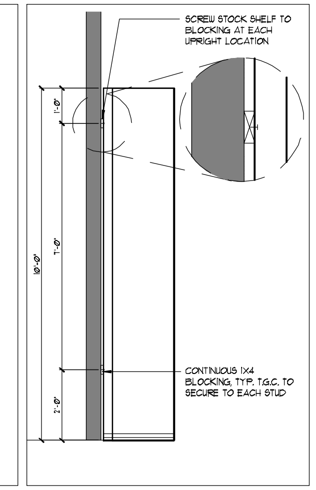

8A STOCK SHELF BRACING

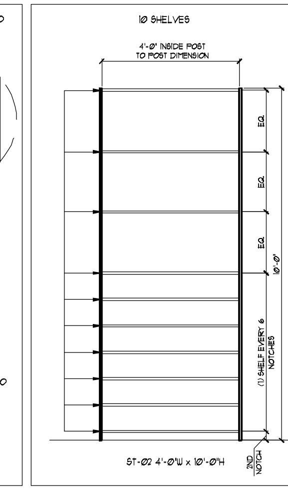

8B BEVERAGE SHELF ELEV.

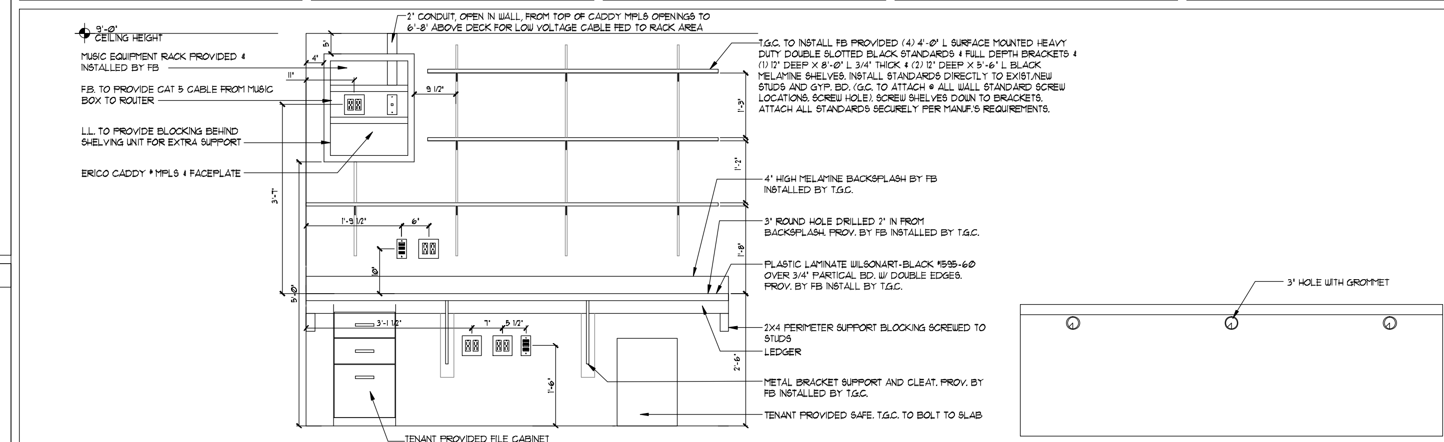

9 MANAGERS DESK ELEVATION/ PLAN VIEW SCALE ¾"=1'-0"

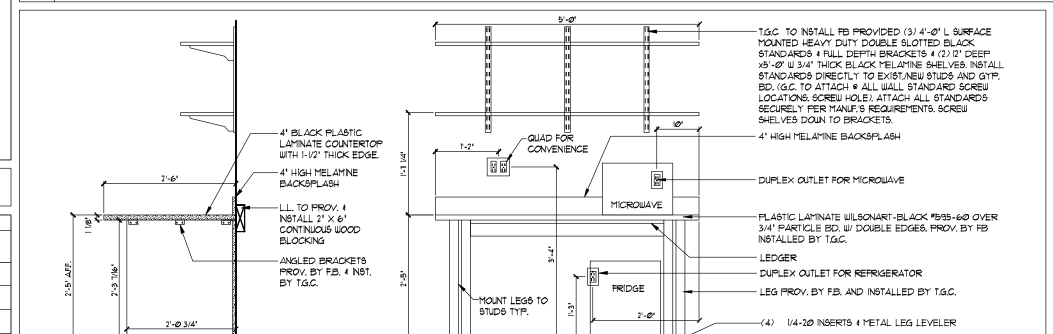

10 EMPLOYEE BREAK TABLE ELEVATION SCALE ¾"=1'-0"

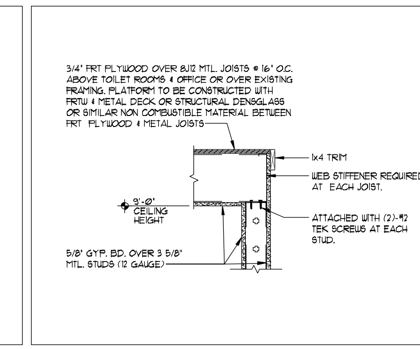

12 PLYWOOD DECK DTL.

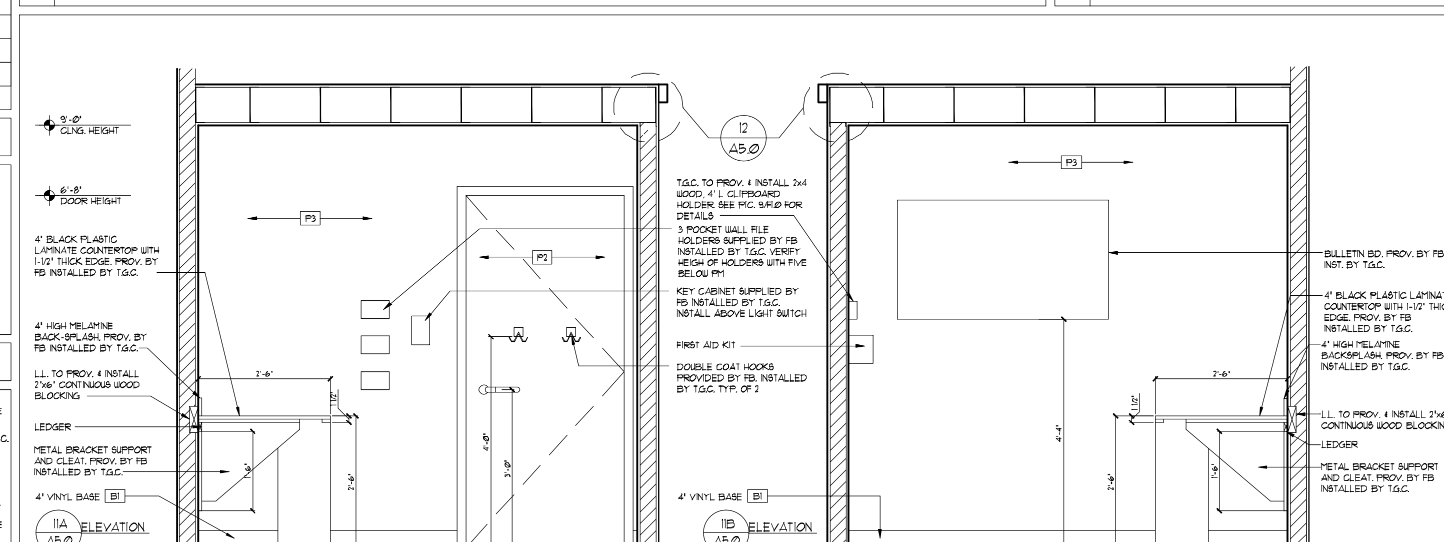

11 MANAGERS ROOM ELEVATION SCALE ¾"=1'-0"

pdms design group
pdmsdesign.com
2225 E. Randol Mill Road, Suite 300
Arlington, Texas 76011
817.633.4200 p 817.633.4153 f

This document contains information proprietary to PDMS Design Group and is furnished in confidence for the limited purpose of evaluation, bidding, review, or construction. This document or its contents may not be used for any other purpose and may not be reproduced or disclosed to others without the prior written consent of PDMS Design Group

CONSULTANTS

mrb
MICHAEL R. BLACK, AIA
2225 E. RANDOL MILL RD., SUITE 300
ARLINGTON, TEXAS 76011
817.701.4819

SEAL

This electronic drawings file is released under the authority of Michael R. Black, AIA Texas Registration #13467 on 09/07/2017, who maintains the original file. This electronic drawing file may be used as a background drawing. Pursuant to Rule 1.103(f) of the Rules and Regulations of the TBAE, the user of this electronic drawing file agrees to assume all responsibility for any modification to or use of this drawing file that is inconsistent with the requirements of the Rules and Regulations of the TBAE. No person may make any modification to this electronic drawing file without the Architect's express written permission

DATE ISSUE

1	10/13/17	CITY/CUST. COMMENTS
△	DATE	REVISION

PROJECT NAME / LOCATION

five BELOW
ARBOR PARK SHOPPING CENTER
17700 SAN PEDRO AVE, SUITE 702
SAN ANTONIO, TX 78232

PROJECT INFORMATION

DATE: 09-07-17
PROJECT NO. 170128
DELIVERY TYPE: V-BOX
DRAWN BY: JHD
CHECKED BY: MRB

SHEET TITLE / NUMBER

DOOR SCHEDULE, OFFICE, BREAK TABLE, NOTES & DETAILS

A5.0