NOTE:
T.G.C. TO INSTALL WHITE 1 1/2" X 1 1/2" PVC ANGLE CORNER GUARDS AFTER GRAPHICS HAVE BEEN INSTALLED, FROM FINISH FLOOR TO 4'-0" A.F.F. ON SALES/ STOCKROOM FLOOR TO DRYWALL CORNERS WHICH REMAIN EXPOSED AFTER FIXTURING, TYP. MUST CONTACT GREAT LAKES OR PREMIERE EUROCASE. SEE T1.0 FOR CONTACT INFO.

NOTE:
MAINTAIN A CLEAR EXIT PATH (MIN. 3'-8") BETWEEN TWO EXIT DOORS.

NOTE:
EXPOSED STOCKROOM FIXTURE UPRIGHTS TO RECEIVE EXCESS PEGBOARD FROM SALES AREA, CUT TO FIT BY T.G.C.

NOTE:
F.B. TO PROV. T.G.C. TO ASSEMBLE/ INSTALL HAND TRUCK.

NOTE:
REFERENCE F1.0 FOR AIRMATIC PROVIDED ITEMS.

NOTE: WALL FIXTURE FASTENING DETAILS
T.G.C. MUST FOLLOW PROPER BLOCKING, FASTENING, & SPACING PER MANUFACTURING SPECS ON SHEET F2.0

NOTE: T.G.C. TO PROVIDE FORKLIFT TO OFF-LOAD OWNER SUPPLIED DELIVERIES.

NOTE:
ALL MILLWORK SHELVING AND DESKS TO BE PROVIDED BY FIVE BELOW AND INSTALLED BY T.G.C.

NOTE:
FIXTURE MFG. TO PROVIDE FLOOR LEVELERS FOR ALL FIXTURES. G.C. TO ENSURE ALL FIXTURES ARE INSTALLED LEVEL.

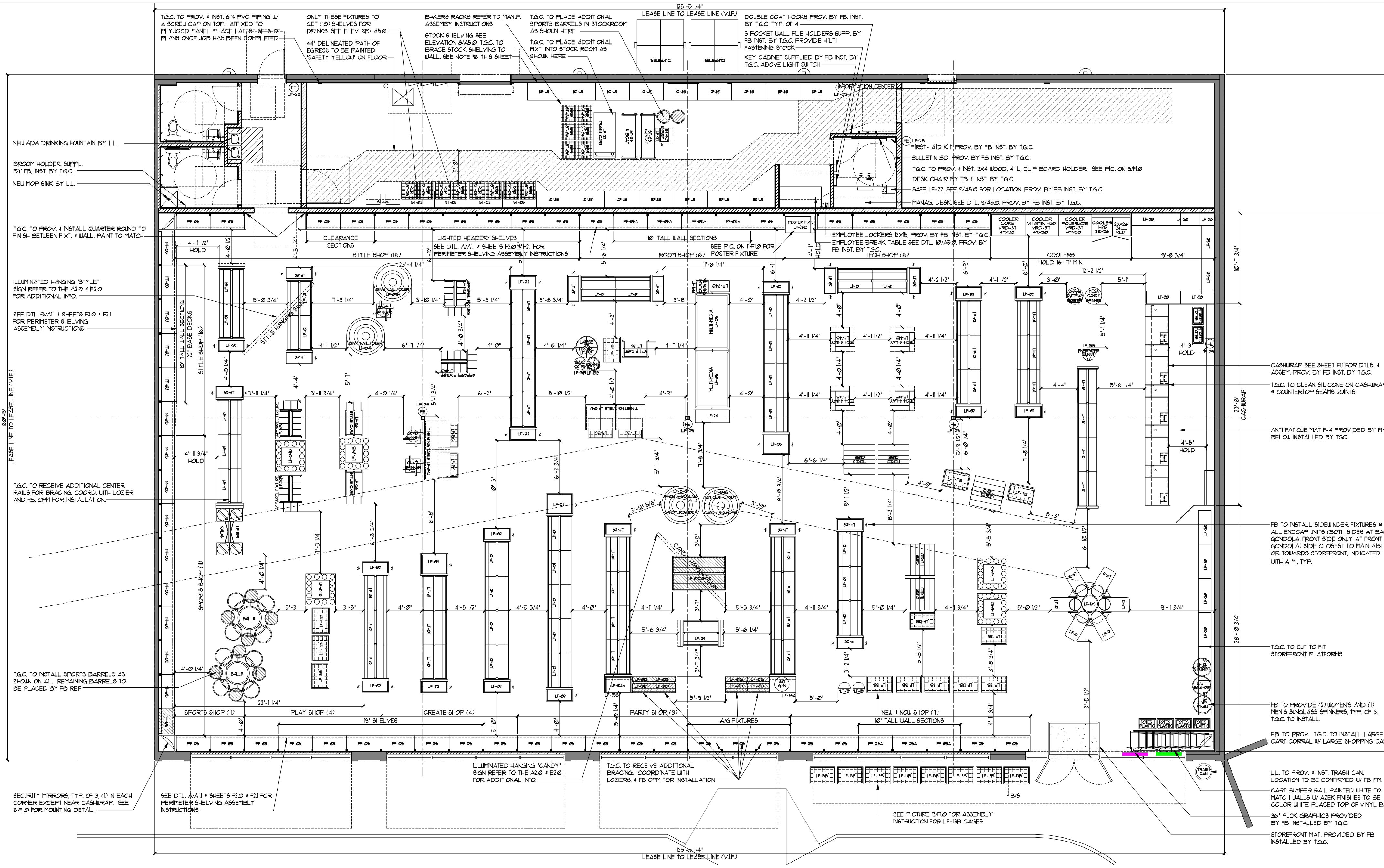

NOTE:
TGC TO ONLY INSTALL PERIMETER SHELVING AS SHOWN ON DTL. A & B ON THIS SHEET. TGC TO LEAVE THE REMAINING SHELVING PALLETIZED AND IN BOXES. PLACE PALLETS IN GREETING CARD RACK AREA FOR TEMP. STORAGE.

1 FIXTURE PLAN — SCALE: 3/16" = 1'=0"

FIXTURE ID.	SYMBOL	DESCRIPTION
COOLERS	COOLER	LARGE DRINK COOLERS, PROV. & INSTALLED BY FB VENDOR
CW-01	CW-01	CASHWRAP COUNTER & BACKWRAP COUNTER
CW-03	IMPULSE CASHWRAP	IMPULSE CASH WRAP SET UP. QTY = # OF REGISTERS MINUS ONE
LF-01	LF-01	48"W X (2) 16"D BASE SHELVES + 3" UPRIGHT (35" OVERALL) X 60"H (INTERIOR)
LF-01A	LF-01A	48"W X (2) 13"D BASE SHELVES + 3" UPRIGHT (29 OVERALL) X 60"H (INTERIOR)
LF-01B	LF-01B	25"W X (2- 11"D BASE SHELVES + 1-1/2" UPRIGHT) X 60" MOBILE DVD GONDOLA W/ 6" X 25" ENDCAPS, BOTH SIDES
LF-01C	LF-01C	36"W X (2) 16"D BASE SHELVES + 3" UPRIGHT (35 OVERALL) X 60"H (INTERIOR)
LF-01D	LF-01D	36"W X (2) 13"D BASE SHELVES + 3" UPRIGHT (29 OVERALL) X 60"H (INTERIOR)
LF-01E	LF-01E	24"W X (2) 13"D BASE SHELVES + 3" UPRIGHT (29 OVERALL) X 60"H (INTERIOR)
LF-02	LF-02	36"W X 16"D X 60"H
LF-02A	LF-02A	30"W X 13"D X 60"H
LF-02C	LF-02C	WIRE ENDCAPS PROV. BY FB & INSTALLED BY T.G.C.
LF-03	LF-03	28" WIDE BULK ENDCAP. REFER TO DETAIL 1 ON F1.0 FOR ADDITIONAL INFO
LF-03A	LF-03A	36" WIDE FREESTANDING ENDCAP
LF-03B	LF-03B	30" WIDE FREESTANDING ENDCAP
LF-04A	LF-04A	88" X 42" WHITE NESTING (WEISS) TABLE
LF-04B		44" X 42" SMALL MIDWAY CUBES
LF-04C		72" X 42" BLACK NESTING (WEISS) TABLE
LF-04D		88" X 42" DIVA TABLE
LF-04E		88" X 42" DIVA NAIL TABLE
LF-04F		44" X 42" DIVA NAIL TABLE
LF-04G		53" DIA. CANDY TOWER TABLE
LF-04H		53" DIA DIVA NAIL TOWER TABLE
LF-04J		88" X 36" NESTING TABLE

FIXTURE ID.	SYMBOL	DESCRIPTION
LF-05	LF-05	24" X 48" BAKER'S RACK
LF-05A	LF-05A	24" X 48" ROLLING BAKER'S RACK
LF-06	LF-06 MULTI MEDIA	48" X 80" MULTI-MEDIA TABLE
LF-08	LF-08	36" x 72" MODIFIED TABLE W/ BINS (DOLLAR TABLE)
LF-09	LF-09	42" x 72" TABLE W/ BINS (DOLLAR TABLE)
LF-09A	LF-09A	42" x 72" TABLE W/ BINS (DOLLAR TABLE)
LF-10		42" x 48" LINE QUEUE FIXTURE
LF-10S (S)	15"D	15"D - SMALL DRUM
LF-10M (M)	19"D	19"D - MEDIUM DRUM
LF-10 (L)	24"D	24"D - LARGE DRUM
LF-12		WHEEL BARROWS PROV. BY F.B. & INST. BY T.G.C.
LF-12A		WHEEL BARROW BALL TOWER PROV. BY F.B. & INST. BY T.G.C.
LF-13		36" X 36" WIRE CAGES
LF-13A		36" X 36" WIRE CAGES - ADDITIONAL
LF-13B		36" X 24" WIRE CAGES
LF-13C		28.5" X 34.5" WIRE CAGES - UNDER NESTING TABLE
LF-14		38" X 38" FOUR WAY FIXTURE
LF-14A		36" X 36" TECH FOUR WAY FIXTURE
LF-14B		50" X 30" APPAREL FIXTURE
LF-15	LF-15	JEWELRY SPINNER PROV. BY F.B. & INST. BY T.G.C.
LF-15A	LF-15A	SPINNER PROV. BY FB INST. BY T.G.C.
LF-15B		RACK FIXTURES. PROV. & INST. BY FB VENDOR
LF-15B	TY-2.0 LF-15B	RACK FIXTURES. PROV. & INST. BY FB VENDOR
LF-17	LF-17	SUNGLASS FIXTURES PROV. BY FB INST. BY T.G.C.

FIXTURE ID.	SYMBOL	DESCRIPTION
LF-20	LF-20	STOREFRONT PLATFORMS 48" L X 18"D LENGTH TO BE CUT IN FIELD IF REQ'D.
LF-21	LF-21	EMPLOYEE LOCKERS
LF-22	LF-22	SAFE
LF-23	LF-23	18" X 24" CUSTOM CLEARANCE FIXT.
LF-23A		BACK TO BACK FLEX FIXTURE
LF-24	LF-24	BOOK PLATFORMS 48"L X 18"D X 5"H
LF-24A	LF-24A	WEISS TABLE PLATFORMS 42"L X 16"D X 5"H
LF-24B	LF-24B	EDUCATIONAL FIXTURE 27"L X 16"D X 30"H
LF-24C	LF-24C	NOW TABLE PLATFORM 42"L X 16"D X 5" H
LF-25	LF-25	DOUBLE STAND 32"L X 24W
LF-25A		QUAD SPINNER
LF-26	LF-26	POSTERBOARD FIXTURE 36"L X 36"W
LF-26B	LF-26B	POSTER FIXTURE PROV. BY FB VENDOR INST. BY T.G.C.
LF-27	UMBRELLA STAND	UMBRELLA FIXTURE. PROV. BY F.B. & T.G.C. TO ASSEMBLE & INSTALL
LF-29	FE	FIRE EXTINGUISHER PROV & INST. BY L.L. CONFIRM FINAL LOCATION WITH CITY
LF-30 (S)		SMALL CART CORRAL, PROV. BY F.B. & INST. BY T.G.C.
LF-30 (L)		LARGE CART CORRAL, PROV. BY F.B. & INST. BY T.G.C.
LF-31 (S)		SMALL CARTS (QTY. 18 CARTS)
LF-31 (L)		LARGE CARTS (QTY. 18 CARTS)
LF-32		TRASH CART
LF-33		STANCHIONS. PROV. BY FB. INST. BY T.G.C.
LF-34	PLASTIC TOTES	PLASTIC TOTES PROV. BY FB. INST. BY T.G.C.
LF-35		GREETING CARD RACK (110" L X 26" W), PROV. & INST. BY FB VENDOR
LF-36		STYLE CART (24" L X 47" W), PROV. & INST. BY FB VENDOR

FIXTURE ID.	SYMBOL	DESCRIPTION
PF-03	PF-03	48"W x 19"D (22" OVERALL) x 120"H PERIMETER GONDOLA WITH 48"W x 22"D (25" OVERALL) BASE DECK
PF-05	PF-05	48"W x 19"D (22" OVERALL) x 96"H PERIMETER GONDOLA
PF-05A	PF-05A	48"W x 19"D (22" OVERALL) x 120"H PERIMETER GONDOLA
PF-05B	PF-05B	48"W x 19"D (22" OVERALL) x 120"H PERIMETER GONDOLA WITH ANGLED TRANSITION BASE
PF-06	PF-06	36"W x 19"D (22" OVERALL) x 96"H PERIMETER GONDOLA
PF-06A	PF-06A	36"W x 19"D (22" OVERALL) x 120"H PERIMETER GONDOLA
PF-09	PF-09	48"W x 16"D (19" OVERALL) x 96"H PERIMETER GONDOLA
PF-09A	PF-09A	48"W x 16"D (19" OVERALL) x 120"H PERIMETER GONDOLA
PF-09B	PF-09B	48"W x 16"D (19" OVERALL) x 120"H PERIMETER GONDOLA WITH ANGLED TRANSITION BASE
PF-10	PF-10	36"W x 16"D (19" OVERALL) x 96"H PERIMETER GONDOLA
PF-10A	PF-10A	36"W x 16"D (19" OVERALL) x 120"H PERIMETER GONDOLA
PF-13	PF-13	48"W x 13"D (16" OVERALL) x 96"H PERIMETER GONDOLA
PF-13A	PF-13A	48"W x 13"D (16" OVERALL) x 120"H PERIMETER GONDOLA
PF-13B	PF-13B	48"W x 13"D (16" OVERALL) x 120"H PERIMETER GONDOLA
PF-15	PF-15	30"W x 13"D (16" OVERALL) x 96"H PERIMETER GONDOLA
PF-15A	PF-15A	30"W x 13"D (16" OVERALL) x 120"H PERIMETER GONDOLA
ST-01	ST-01	24" X 48" STOCKROOM SHELVING
ST-01A	ST-01A	24" X 36" STOCKROOM SHELVING
ST-01B	ST-01B	3/4" X 48" X 120"H STOCKROOM SHELVING PEG BOARD
ST-03	ST-03	24" X 48" STOCKROOM SHELVING WITH ROLLING BAKER RACKS
ST-04	ST-04	24" X 48" HOPPER BIN
ST-05	U-BOAT ST-05	18" X 62" STOCK ROOM U-BOAT
ST-06	RBR ST-06	ROLLING BAKER RACKS
TRASH CAN		CAN: PUPS-32-24" DIA. x30"H LID: PUPRBR-3208- 24" DIAx13"H. BLACK COLOR FOR BOTH

2 FIXTURE SCHEDULE

1. T.G.C TO INSTALL ALL BRACKET SIGNS ON FIXTURES. SIGN FURN. BY TENANT. LOCATIONS TO BE DETERMINED BY TENANT.
2. ALL DISPLAY FIXTURES, FITTING ROOMS (FIXTURE TYPE, CASH/ BACK WRAP, AND RECEIVING AREA) SHALL BE FURNISHED BY THE OWNER AND INSTALLED BY THE T.G.C. THE CONTRACTOR SHALL COORDINATE FINAL ASSEMBLY AND PLACEMENT OF FIXTURES WITH OWNER'S REPRESENTATIVE.
3. T.G.C. SHALL ANCHOR ALL WALL DISPLAY FIXTURES WITH PROPER WALL REINFORCEMENT PROVIDED, ANY WOOD BLOCKING MEMBER ALL BE FIRE RETARDANT MATERIAL, COMPLYING WITH ALL APPLICABLE CODES AND STANDARDS
4. T.G.C. MUST TOUCH- UP ALL FIXTURES AFTER INSTALLATION AND PAINT ALL EXPOSED NAILS, SCREWS, ANGLES, ETC. TO MATCH ADJACENT FINISH
5. SEE FLOOR PLAN AND ELEVATIONS FOR WALL FIXTURE LOCATIONS AND ADDITIONAL INFORMATION
6. T.G.C. SHALL FURNISH AND INSTALL (2) 1X4 CONTINUOUS HORIZONTAL FURRING STRIPS BEHIND ALL PERIMETER STOCK SHELVES. ATTACH FURRING STRIPS SECURELY.
7. PRIOR TO INSTALLING SHELVING IN STOCKROOM, T.G.C. IS TO VERIFY THE CEILING HEIGHT & PROVIDE PROPER CLEARANCE FOR SPRINKLER HEADS, LIGHTS, ETC. CUT OR MODIFY SHELVING AS REQ'D TO ACCOMMODATE FIELD CONDITIONS.
8. T.G.C. SHALL ASSEMBLE AND INSTALL ALL VENDOR PROVIDED FIXTURES, COORDINATE LOCATIONS WITH FIXTURE PLAN AND FIVE BELOW REPRESENTATIVE.
9. T.G.C. SHALL INSTALL ALL DECALS IN FIXTURES AS SHOWN ON SHEET F1.0.
10. T.G.C. SHALL INSTALL ONE SHELF AT ALL WALL GONDOLAS AT SAME HEIGHT PRIOR TO STORE TURNOVER TO ENSURE ALL SHELVING UNITS FIT PROPERLY.
11. T.G.C. SHALL INSTALL SIDE WINDER RACKS AT ALL END CAPS AS INDICATED W/ AN ASTERISK ON THE FIXTURE PLAN.
12. T.G.C. TO REMOVE ALL PLASTIC WRAPPING AFTER PLACEMENT OF FIXTURE. DO NOT PULL FIXTURES BY POLES.

3 FIXTURE NOTES

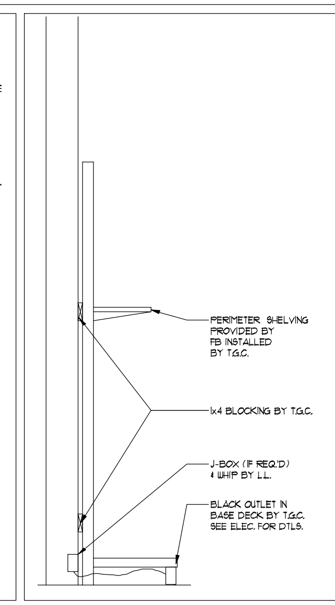

A PERIMETER SEC. SCALE: 3/4" = 1'=0"

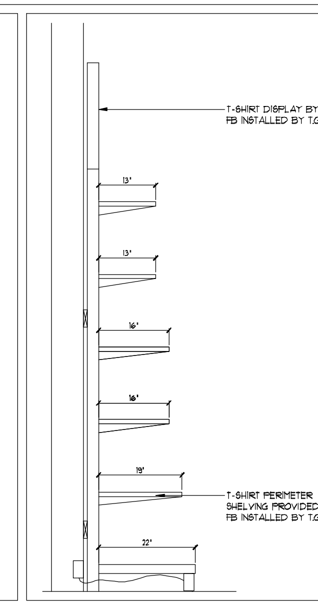

B T-SHIRT SEC SCALE: 3/4" = 1'=0"

pdms design group
pdmsdesign.com
2225 E. Randol Mill Road, Suite 300
Arlington, Texas 76011
817.633.4200 p 817.633.4153 f

This document contains information proprietary to PDMS Design Group and is furnished in confidence for the limited purpose of evaluation, bidding, review, or construction. This document or its contents may not be used for any other purpose and may not be reproduced or disclosed to others without the prior written consent of PDMS Design Group

CONSULTANTS

mrb
MICHAEL R. BLACK, AIA
2225 E. RANDOL MILL RD., SUITE 300
ARLINGTON, TEXAS 76011
817.701.4819

SEAL

This electronic drawings file is released under the authority of Michael R. Black, AIA Texas Registration #13467 on 09/07/2017, who maintains the original file. This electronic drawing file may be used as a background drawing. Pursuant to Rule 1.103(f) of the Rules and Regulations of the TBAE, the user of this electronic drawing file agrees to assume all responsibility for any modification to or use of this drawing file that is inconsistent with the requirements of the Rules and Regulations of the TBAE. No person may make any modification to this electronic drawing file without the Architect's express written permission

REGISTERED ARCHITECT — MICHAEL R. BLACK — 13467 — STATE OF TEXAS — Expires 1/31/18

DATE ISSUE

	DATE	REVISION
1	10/13/17	CITY/CUST. COMMENTS

PROJECT NAME / LOCATION

five BELoW
ARBOR PARK SHOPPING CENTER
17700 SAN PEDRO AVE, SUITE 702
SAN ANTONIO, TX 78232

PROJECT INFORMATION

DATE: 09-07-17
PROJECT NO. 170128
DELIVERY TYPE: V-BOX
DRAWN BY: JHD
CHECKED BY: MRB

SHEET TITLE / NUMBER

FIXTURE PLAN

A1.1