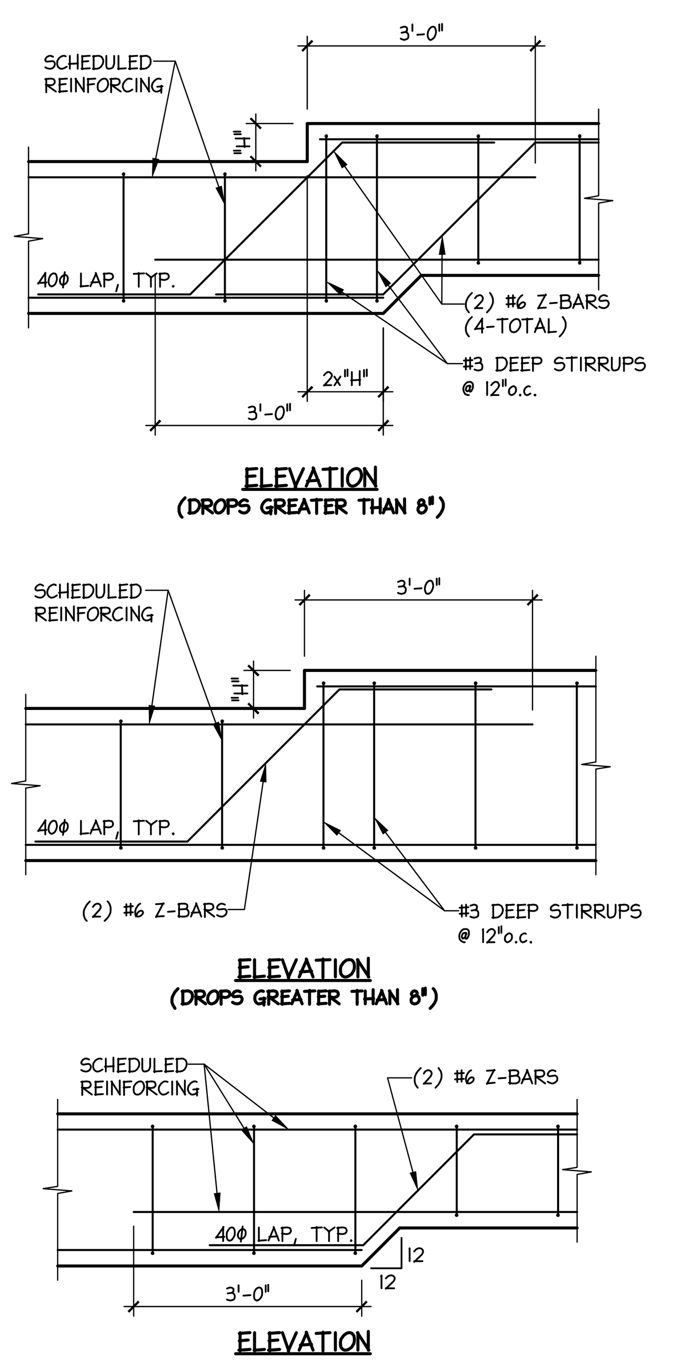

6 DETAIL
TYPICAL VERTICAL BEAM TRANSITION
SCALE: 1/2" = 1'-0"

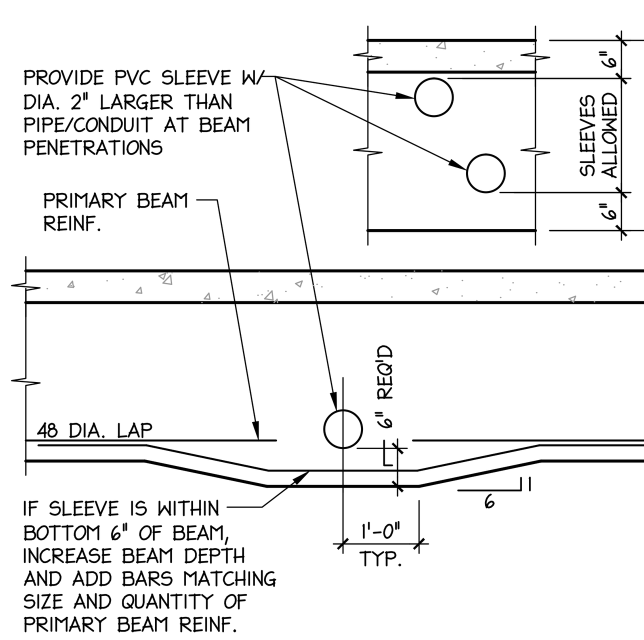

7 DETAIL
TYP. BEAM PENETRATION
SCALE: 1/2" = 1'-0"

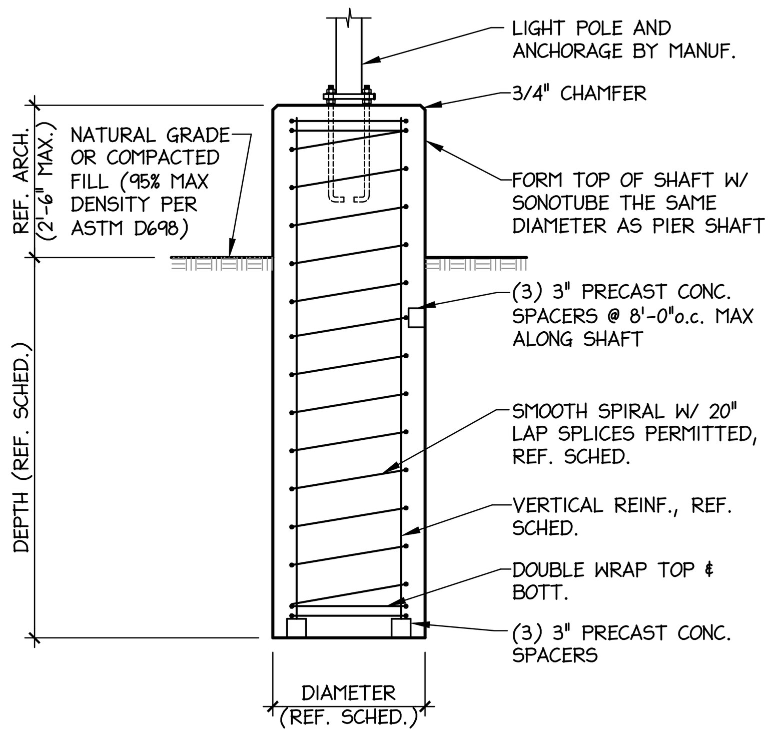

4 DETAIL
TYPICAL LIGHT POLE FOOTING
SCALE: N.T.S.

LIGHT POLE FOOTING SCHEDULE

MK	SHAFT			DEPTH	REMARKS
	DIA.	VERT. BARS	SPIRAL		
LP1	18"	(6) #6	3/8"ϕ @ 6" PITCH	6'-0"	

LIGHT POLE FOOTING NOTES:

LP-1 FORM TOP OF SHAFT WITH FIBERFORM AT LEAST 2'-0" BELOW GRADE, OR DEEPER IF IMPROPERLY DRILLED OVERSIZE OR OUT OF ROUND.

LP-2 REINFORCING CAGE SHALL BE HELD SECURELY AWAY FROM EARTH AT SIDES & BOTTOM BY SETS OF 3 PRECAST CONCRETE SPACER BLOCKS EVERY 8'-0" ALONG CAGE AND AT BOTTOM. DO NOT RAISE CAGE OFF OF BOTTOM.

LP-3 ALL FOOTING EXCAVATIONS SHALL BE FREE OF WATER PRIOR TO PLACING CONCRETE.

LP-4 PIER SHAFT SHALL BE DRILLED PLUMB ALONG ITS TOTAL LENGTH WITHIN 1/2" PER 10'-0" OF DEPTH.

LP-5 BOTTOM OF FOOTING SHALL BE CLEAN AND FREE OF ALL LOOSE MATERIALS AND RECOMPACTED CUTTING PRIOR TO PLACING CONCRETE.

LP-6 PLACEMENT OF CONCRETE AND REINFORCING IN SHAFT SHALL BE THE SAME DAY OF DRILLING.

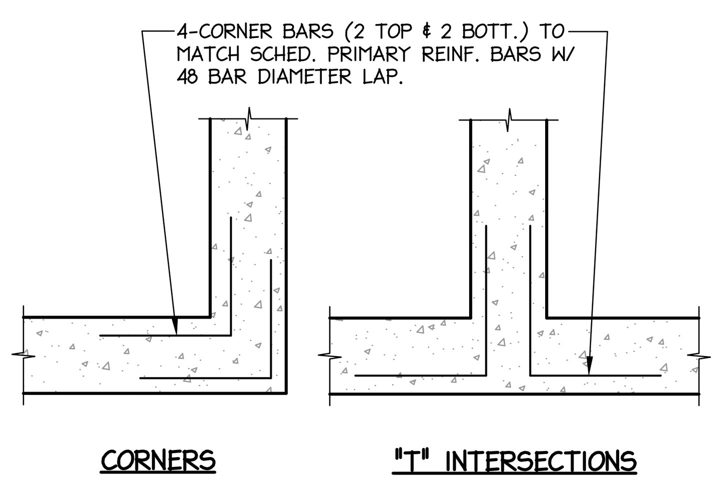

5 DETAIL
TYP. CORNER BARS
SCALE: 1/2" = 1'-0"

DEFERRED SUBMITTALS

FOR THE PURPOSE OF THIS SECTION, DEFERRED SUBMITTALS ARE DEFINED AS PER SECTION 107.3.4.1 OF THE IBC. SUBMITTAL DOCUMENTS FOR DEFERRED SUBMITTAL ITEMS SHALL BE SUBMITTED TO THE ENGINEER, ARCHITECT AND BUILDING OFFICIAL FOR THEIR REVIEW FOR GENERAL CONFORMANCE WITH THE DESIGN OF THE BUILDING. DEFERRED STRUCTURAL SUBMITTALS FOR THIS PROJECT ARE:

BUILDING COMPONENT	SUBMITTAL REQUIREMENT
PRE-ENGINEERED WOOD ROOF AND FLOOR TRUSS	DESIGNED, SIGNED AND SEALED BY AN ENGINEER LICENSED IN THE STATE OF TEXAS.

SITE OBSERVATIONS BY STRUCTURAL ENGINEER

SITE OBSERVATIONS WILL BE CONDUCTED IN ACCORDANCE WITH IBC SECTION 109 BY THE ENGINEER OF RECORD OR APPROVED AGENT AT THE STAGES OF CONSTRUCTION LISTED BELOW. THE CONTRACTOR SHALL NOTIFY THE ENGINEER WHEN CONSTRUCTION HAS REACHED THE STAGE LISTED BELOW AND BEFORE THE WORK TO BE OBSERVED IS COVERED UP, WALLED IN, OR BECOMES OTHERWISE HIDDEN FROM VIEW OR INACCESSIBLE TO ANY NECESSARY CORRECTIONS. AT THE CONCLUSION OF THE PROJECT, THE ENGINEER OF RECORD WILL SUBMIT TO THE BUILDING OFFICIAL A WRITTEN STATEMENT THAT THE BUILDING HAS BEEN BUILT IN GENERAL CONFORMANCE TO THE STRUCTURAL PLANS AND SPECIFICATIONS. THESE OBSERVATIONS TO NOT CONSTITUTE THE SPECIAL INSPECTION REQUIREMENTS OF IBC SECTION 1704.

OBSERVATION	STAGE OF CONSTRUCTION	DATE OBSERVED
SLAB ON GRADE	FORMS, VAPOR BARRIER, & REINFORCING IN PLACE. PRIOR TO CONCRETE PLACEMENT	
STEEL FRAME	ALL STEEL FRAMING ERECTED & DECK INSTALLED. PRIOR TO CONCRETE POUR, ROOFING INSTALLATION, OR METAL STUD INSTALLATION.	
WOOD FRAMING	ALL WALLS, FLOORS, & ROOF FRAMED, SHEATHING INSTALLED, HOLDOWNS, CLIPS, & HANGERS INSTALLED. PRIOR TO ROOFING, HOUSEWRAP, AND INSULATION.	

LE PROJECT NO.: 15-02981
LE FILE NO.: BCBS1.0

STRUCTURAL SPECIAL INSPECTION NOTES:

SI-1 THE OWNER SHALL EMPLOY THE SERVICES OF ONE OR MORE SPECIAL INSPECTORS TO PROVIDE SPECIAL INSPECTIONS DURING THE CONSTRUCTION OF THIS PROJECT AS SPECIFIED IN SECTION 1704 OF THE INTERNATIONAL BUILDING CODE. SPECIAL INSPECTIONS ARE IN ADDITION TO THE INSPECTIONS SPECIFIED IN SECTION 110 OF THE IBC.

SI-2 THE SPECIAL INSPECTOR SHALL BE A QUALIFIED PERSON WHO SHALL DEMONSTRATE COMPETENCE, TO THE SATISFACTION OF THE BUILDING OFFICIAL AND THE REGISTERED DESIGN PROFESSIONAL RESPONSIBLE FOR THE DESIGN OF THE STRUCTURE, FOR INSPECTION OF THE PARTICULAR TYPE OF CONSTRUCTION OR OPERATION REQUIRING SPECIAL INSPECTION.

SI-3 DUTIES AND RESPONSIBILITIES OF THE SPECIAL INSPECTOR:

A. THE SPECIAL INSPECTOR SHALL OBSERVE THE WORK ASSIGNED FOR CONFORMANCE WITH THE APPROVED DESIGN DRAWINGS AND SPECIFICATIONS. THE INSPECTOR MAY NOT ALTER, MODIFY, ENLARGE OR WAIVE ANY OF THE REQUIREMENTS OF THE CONTRACT DOCUMENTS.

B. THE SPECIAL INSPECTOR SHALL FURNISH REPORTS OF REQUIRED SPECIAL INSPECTIONS TO THE BUILDING OFFICIAL, THE REGISTERED DESIGN PROFESSIONAL IN RESPONSIBLE CHARGE (RDPIRC), AND THE CONTRACTOR. ALL DISCREPANCIES SHALL BE BROUGHT TO THE IMMEDIATE ATTENTION OF THE CONTRACTOR FOR CORRECTION. IF DISCREPANCIES ARE NOT CORRECTED THE INSPECTOR SHALL PROVIDE A NOTICE OF NONCOMPLIANCE TO THE BUILDING OFFICIAL, THE RDPIRC, AND THE CONTRACTOR.

C. THE SPECIAL INSPECTOR SHALL SUBMIT A FINAL SIGNED REPORT STATING WHETHER THE WORK REQUIRING SPECIAL INSPECTION WAS, TO THE BEST OF THE SPECIAL INSPECTOR'S KNOWLEDGE, IN CONFORMANCE WITH THE APPROVED PLANS AND SPECIFICATIONS AND THE APPLICABLE WORKMANSHIP PROVISIONS OF THE CODE.

SI-4 WHERE SPECIAL INSPECTION REQUIREMENTS DUPLICATE THE REQUIREMENTS OF SPECIFIED QUALITY ASSURANCE TESTING, DUPLICATE INSPECTIONS WILL NOT BE REQUIRED.

REQUIRED STRUCTURAL SPECIAL INSPECTIONS

SPECIAL INSPECTION	FREQUENCY	REFERENCED STANDARDS
IBC 1704.2.5 – INSPECTION OF FABRICATORS		
FABRICATION AND IMPLEMENTATION PROCEDURES. THE SPECIAL INSPECTOR SHALL VERIFY THAT THE FABRICATOR MAINTAINS DETAILED FABRICATION AND QUALITY CONTROL PROCEDURES THAT PROVIDE A BASIS FOR INSPECTION CONTROL OF THE WORKMANSHIP AND THE FABRICATOR'S ABILITY TO CONFORM TO APPROVED CONSTRUCTION DOCUMENTS AND REFERENCED STANDARDS. THE SPECIAL INSPECTOR SHALL REVIEW THE PROCEDURES FOR COMPLETENESS AND ADEQUACY RELATIVE TO THE CODE REQUIREMENTS FOR THE FABRICATORS SCOPE OF WORK. EXCEPTION: SPECIAL INSPECTIONS SHALL NOT BE REQUIRED WHERE THE FABRICATOR IS APPROVED IN ACCORDANCE WITH IBC SECTION 1704.2.5.2.	CONTINUOUS	
IBC 1705.2 – STEEL CONSTRUCTION		AISC 360
IBC 1705.3 – CONCRETE CONSTRUCTION		
1. INSPECTION OF REINFORCING STEEL, INCLUDING PRE STRESSING TENDONS, AND PLACEMENT.	PERIODIC	ACI 318: 3.5,7.1–7.7
2. INSPECTION OF REINFORCING STEEL WELDING (NOT PERMITTED)	NOT REQ'D	AWS D1.4, ACI 318:3.5.2
3. INSPECT BOLTS TO BE INSTALLED IN CONCRETE PRIOR TO AND DURING PLACEMENT OF CONCRETE WHERE ALLOWABLE LOADS HAVE BEEN INCREASED. (ALLOWABLE LOADS NOT INCREASED)	NOT REQ'D	
4. VERIFY USE OF REQUIRED DESIGN MIX – EACH CONCRETE POUR	PERIODIC	ACI 318: CH. 4, 5.2–5.4
5. SAMPLING OF FRESH CONCRETE – A. TAKE SAMPLES AFTER WATER, IF ANY, IS ADDED. B. PROVIDE A SET OF 4 CYLINDERS TO BE TAKEN EVERY 80 CU. YD., OR FRACTION THEREOF, BY TESTING LAB C. MONITOR SLUMP, AIR CONTENT, AND TEMP. OF CONCRETE. NOTIFY DELIVERY DRIVER IF SLUMP DEVIATES MORE THAN PLUS OR MINUS 1 INCH FROM SPECIFIED VALUE. THEREOF, BY TESTING LAB	CONTINUOUS (EACH POUR)	ACI 318: CH. 5.6, 5.8
6. INSPECTION OF CONCRETE AND SHOTCRETE PLACEMENT FOR PROPER APPLICATION TECHNIQUES	CONTINUOUS	ACI 318: CH. 5.9, 5.10
7. INSPECTION FOR MAINTENANCE OF SPECIFIED CURING TEMPERATURE AND TECHNIQUES.	PERIODIC	ACI 318: 5.11–5.13
8. INSPECTION OF PRE STRESSED CONCRETE.	NOT REQ'D	
9. ERECTION OF PRECAST CONCRETE MEMBERS.	NOT REQ'D	
10. VERIFICATION OF IN-SITU CONCRETE STRENGTH, PRIOR TO STRESSING OF TENDONS IN POST- TENSIONED CONCRETE AND PRIOR TO REMOVAL OF SHORES AND FORMS FROM BEAMS AND STRUCTURAL SLABS.	PERIODIC	ACI 318: 6.2
IBC 1705.4 – MASONRY CONSTRUCTION		
EXEMPTIONS: 1. EMPIRICALLY DESIGNED MASONRY, GLASS UNIT MASONRY, AND MASONRY VENEER IN NON-ESSENTIAL FACILITIES. 2. MASONRY FOUNDATION WALLS CONSTRUCTED IN ACCORDANCE WITH TABLE 1805.5 (1 THRU 4)	NOT REQ'D	
LEVEL 1 SPECIAL INSPECTION – REQUIRED IN 1) EMPIRICALLY DESIGNED MASONRY, GLASS UNIT MASONRY AND MASONRY VENEER IN ESSENTIAL FACILITIES AND 2) ENGINEERED MASONRY IN NONESSENTIAL FACILITIES.	CONTINUOUS	REF. ACI 530 & ACI 530.1
LEVEL 2 SPECIAL INSPECTION – REQUIRED FOR ENGINEERED MASONRY IN ESSENTIAL FACILITIES.	CONTINUOUS	REF. ACI 530 & ACI 530.1
IBC 1705.5 – WOOD CONSTRUCTION		
1. PREFABRICATED STRUCTURAL ELEMENTS AND ASSEMBLIES.	PERIODIC	IBC 1704.2.5
2. SITE BUILT ASSEMBLIES	NOT REQ'D	
3. FABRICATION OF HIGH-LOAD DIAPHRAGMS A. DIAPHRAGMS USING VALUES FROM IBC TABLE 2306.2	PERIODIC	IBC 1705.5.1
4. METAL-PLATE-CONNECTED WOOD TRUSSES W/ 60' SPANS OR GREATER	PERIODIC	IBC 1705.5.2
IBC 1705.6 – SOILS		APPROVED SOILS REPORT
1. SITE PREPARATION: A. VERIFY THAT THE SITE SUB GRADE HAS BEEN PREPARED IN ACCORDANCE WITH APPROVED SOILS REPORT.	PERIODIC	
B. TEST DENSITY OF THE SUB GRADE AT THE RATE OF ONE TEST PER EACH 3000 SQ. FT.	PERIODIC	
2. DURING FILL PLACEMENT: A. VERIFY THAT THE MATERIAL BEING USED AND THE MAXIMUM LIFT THICKNESS COMPLY WITH APPROVED REPORT. 3. EVALUATION OF IN PLACE DENSITY: A. SUB GRADE – ONE TEST PER EACH 3000 SQ. FT. B. STRUCTURAL FILL – ONE TEST PER EACH 3000 SQ. FT., MINIMUM OF ONE TEST PER LIFT.	PERIODIC	
IBC 1705.7 – PILE FOUNDATIONS	NOT REQ'D	
IBC 1705.8 – PIER FOUNDATIONS	NOT REQ'D	
IBC 1705.9 – HELICAL PILE FOUNDATIONS	NOT REQ'D	
IBC 1705.10 – WIND RESISTANCE	NOT REQ'D	
IBC 1705.11 – SEISMIC RESISTANCE	NOT REQ'D	
IBC 1705.12 – TESTING & QUALIFICATIONS FOR SEISMIC RESISTANCE	NOT REQ'D	

CONCRETE NOTES CONT.:

CN-5 REINFORCING STEEL SHALL BE DOMESTIC NEW BILLET STEEL CONFORMING TO ASTM A615 GRADE 60, EXCEPT TIES AND STIRRUPS MAY BE GRADE 40. BARS DESIGNATED AS CONTINUOUS SHALL BE LAPPED 48 BAR DIAMETERS. WELDED WIRE FABRIC SHALL CONFORM TO ASTM A185 AND SHALL BE LAPPED 8" MINIMUM AT SPLICE POINTS OR 1 1/2 MESHES, WHICHEVER IS GREATER.

CN-6 PORTLAND CEMENT SHALL COMPLY WITH ASTM C-150, TYPE 1. FLY ASH SHALL CONFORM TO ASTM C-618. NORMAL WEIGHT AGGREGATE SHALL COMPLY WITH ASTM C33. WATER SHALL BE POTABLE AND COMPLY WITH ASTM C94.

CN-7 CONCRETE SHALL BE NORMAL WEIGHT, LABORATORY DESIGNED TO DEVELOP MINIMUM SPECIFIED 28 DAY COMPRESSIVE STRENGTH AND PROPORTIONED AS FOLLOWS:

SLAB ON GRADE: 3000 PSI, 5 SACKS OF CEMENT PER CUBIC YARD, 1 1/2" MAXIMUM AGGREGATE, MAXIMUM SLUMP OF 5".

FLY ASH IS LIMITED TO A MAXIMUM 20% CEMENT REPLACEMENT BY WEIGHT.

CN-8 ALL REINFORCING STEEL SHALL BE FREE OF RUST, SCALE, AND DRIED CONCRETE, AND SHALL BE ACCURATELY BENT AND SECURELY TIED INTO POSITION TO PREVENT MOVEMENT DURING CONCRETE PLACEMENT. RAISING REINFORCEMENT DURING POUR WILL NOT BE PERMITTED.

CN-9 CONCRETE COVER SHALL BE AS FOLLOWS, UNLESS NOTED OTHERWISE:

A. CONCRETE CAST AGAINST EARTH – 3"

B. CONCRETE EXPOSED TO EARTH OR WEATHER:
BARS 3/4" AND LARGER IN DIAMETER – 2 INCHES
BARS SMALLER THAN 3/4" DIAMETER – 1 1/2"

C. CONCRETE NOT EXPOSED TO WEATHER OR GROUND:
SLAB ON GRADE – 1 1/2" FROM TOP OF SLAB

CN-10 SET AND BUILD ANCHORAGE AND OTHER EMBEDDED ITEMS INTO FORM WORK AS REQUIRED FOR OTHER WORK THAT IS ATTACHED TO OR SUPPORTED BY CONCRETE. COORDINATE WITH OTHER DISCIPLINES.

CN-11 CONCRETE SHALL BE MIXED AND DELIVERED IN ACCORDANCE WITH ASTM C-94 "STANDARD SPECIFICATION FOR READY-MIXED CONCRETE."

CN-12 CONCRETE WHEN DEPOSITED SHALL HAVE A TEMPERATURE NOT BELOW 50°F OR ABOVE 90°F. APPROPRIATE MEASURES SHALL BE TAKEN TO MAINTAIN TEMPERATURE RANGE AND PREVENT WATER EVAPORATION FOR 5 DAYS AFTER PLACEMENT. SALT OR OTHER CHEMICALS SHALL NOT BE ADDED TO PREVENT FREEZING.

CN-13 CONCRETE SHALL BE CONVEYED TO AND DEPOSITED IN FORM WORK NEAR ITS FINAL POSITION, WITH A FREE VERTICAL DROP NOT EXCEEDING 3 FEET. PLACE CONCRETE IN 12 INCH MAXIMUM LAYERS AND COMPACT EACH LAYER BY MECHANICAL VIBRATING.

CN-14 CONSTRUCTION JOINTS IN MONOLITHIC FRAMING SHALL HAVE PRIOR APPROVAL OF THE ARCHITECT/ENGINEER, U.N.O.

CN-15 SCREEDING, RE-STRAIGHTENING, AND FINISHING OPERATIONS SHALL COMPLY WITH ACI 302.1R. COORDINATE ALL FINISHES WITH ARCHITECTURAL DRAWINGS AND FLOOR FINISH REQUIREMENTS. CAREFULLY TOOL ALL EXPOSED EDGES.

CN-16 CURE CONCRETE FOR AT LEAST SEVEN DAYS BY MOISTURE CURING, SEALED MOISTURE RETAINING COVER CURING, OR A CLEAR WATERBOURNE CURING COMPOUND CONFORMING TO ASTM C309.

CN-17 SIDE FORMS MAY BE REMOVED AFTER CUMULATIVE CURING AT NOT LESS THAN 50°F FOR 24 HOURS AFTER PLACING CONCRETE.

CN-18 PATCH HONEYCOMB, TIE HOLES, AND MINOR DEFECTS WITH ONE PART CEMENT AND TWO PARTS SAND IMMEDIATELY AFTER REMOVING FORMS.

CN-19 EXPOSED CONCRETE SHALL BE RUBBED WITH CARBORUNDUM BRICKS AND WATER AFTER 48 HOURS BUT BEFORE ONE WEEK. PLASTERING SURFACES WILL NOT BE PERMITTED.

CN-20 NOTIFY ENGINEER WHEN FORM WORK AND REINFORCING IS IN PLACE SO ENGINEER CAN OBSERVE REINFORCING STEEL PRIOR TO ALL CONCRETE POURS.

CN-21 INDEPENDENT TESTING LABORATORY SHALL TAKE SAMPLES AND PERFORM SLUMP AND COMPRESSION TESTS PER ASTM C-39 ON CONCRETE PLACED EACH DAY AT THE RATE OF ONE SET OF FOUR CYLINDERS FOR EACH 80 CU. YDS. OR FRACTION THEREOF WITH A MINIMUM INTERVAL OF 50 CU. YDS. BETWEEN SAMPLES.

SPREAD FOOTING SCHEDULE

MK	SIZE "a"	DEPTH	REINFORCEMENT (IN BOTTOM)	REMARKS
F1	2'-6"	SEE NOTE	#5 @ 12"o.c. EA. WAY	

* FOOTING DEPTH SHALL MATCH BOTTOM OF DEEPEST INTERSECTING GRADE BEAM, UNLESS NOTED OTHERWISE

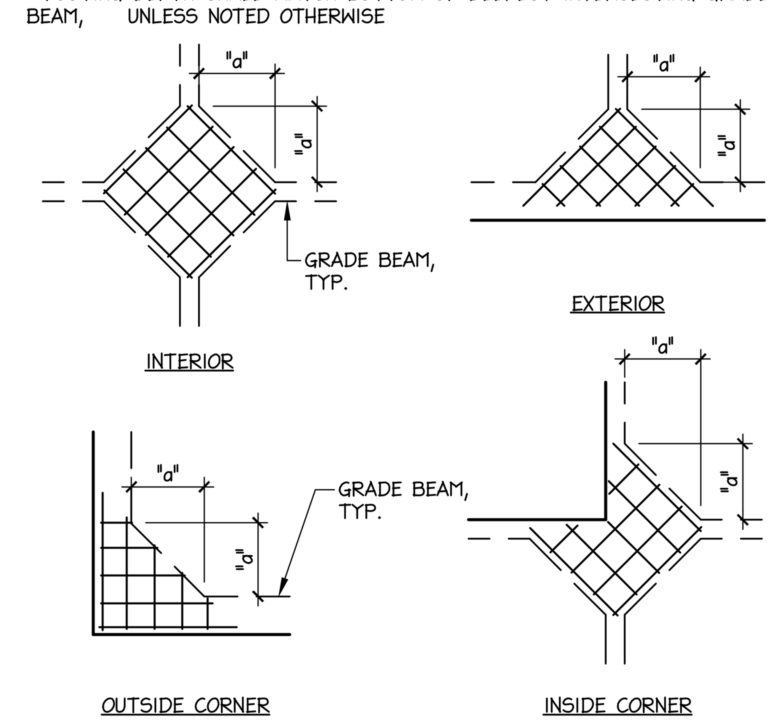

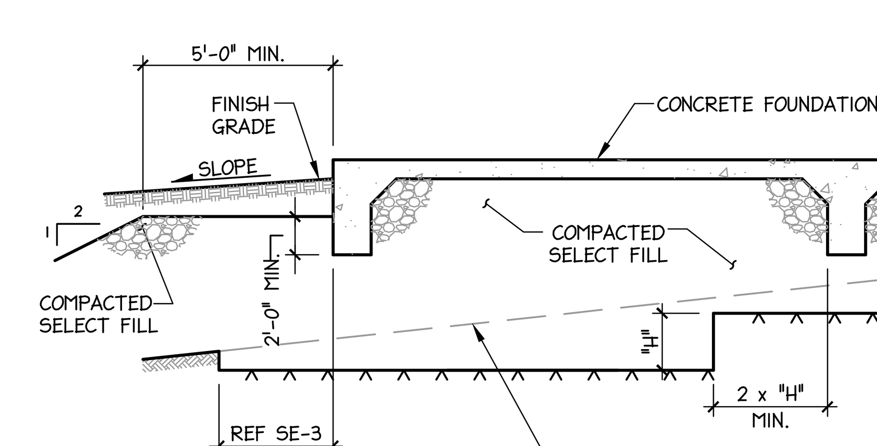

3 DETAIL
TYPICAL STRUCTURAL EARTHWORK
SCALE: N.T.S.

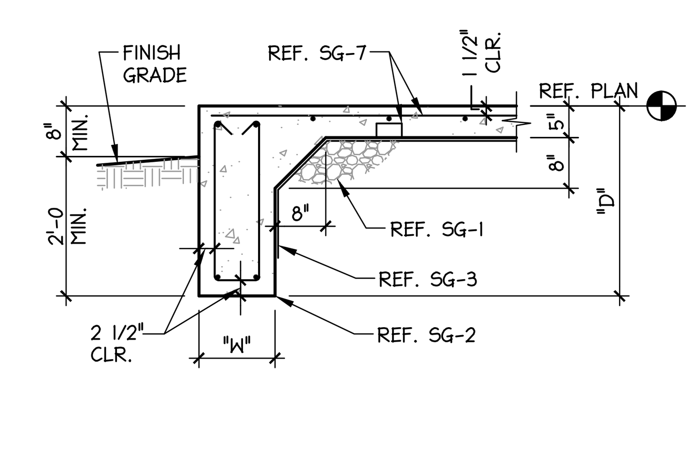

1 SECTION
TYPICAL EXTERIOR BEAM
SCALE: 1/2" = 1'-0"

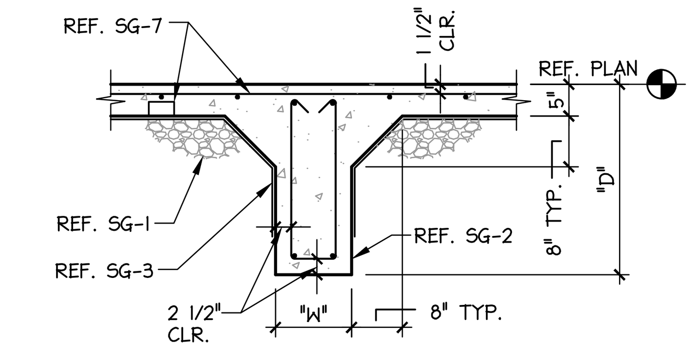

2 SECTION
TYPICAL INTERIOR BEAM
SCALE: 1/2" = 1'-0"

GRADE BEAM SCHEDULE

MK	"W"	"D"	MAIN REINFORCEMENT	STIRRUPS
B1	12"	24"	(2) #6 TOP & BOTTOM	#3 @ 24"o.c.
B2	12"	36"	(2) #6 TOP & BOTTOM	#3 @ 24"o.c.

SLAB ON GRADE FOUNDATION NOTES:

SG-1 PREPARE BUILDING PAD PER "STRUCTURAL EARTHWORK FOR GRADE SUPPORTED FOUNDATION" NOTES.

SG-2 CAREFULLY TRENCH AND SHAPE GRADE BEAMS AND SLAB TURNDOWNS WITH A SMOOTH-MOUTHED BUCKET. IF A TOOTHED BUCKET IS USED, EXCAVATION SHALL BE STOPPED 6" ABOVE FINAL GRADE AND THE REMAINING EXCAVATION ACCOMPLISHED WITH A SMOOTH MOUTHED BUCKET OR BY HAND LABOR TO REMOVE ALL LOOSE SOILS DISTURBED BY THE BUCKET TEETH.

SG-3 PROVIDE 10 MIL POLYOLEFIN (STEGO WRAP OR EQUIVALENT) VAPOR BARRIER ON TOP OF SELECT FILL WITH 12" LAPPED AND TAPED JOINTS. CUT AROUND ROUGH-IN PIPES AND SEAL WITH TAPE. DO NOT INSTALL VAPOR BARRIER ON BEAM SOFFITS AND BOTTOM 6" OF TRENCHES, ATTACH TO TRENCH WALLS TO PREVENT FROM HANGING LOOSELY.

SG-4 WOODFORM EXPOSED FACES TO A DEPTH OF 8" BELOW FINISHED GRADE.

SG-5 ALL BEAM SOFFITS SHALL BEAR 2'-0" MINIMUM INTO NATURAL GRADE OR COMPACTED FILL. ON PERIMETER, INCREASE SCHEDULED BEAM DEPTH AS REQUIRED FOR SOFFIT TO BEAR 2'-0" MINIMUM BELOW FINISH GRADE. CONTRACTOR COORDINATE BEAM DEPTHS WITH REINFORCING STEEL SUPPLIER TO ALLOW PROPER REINFORCING BARS AT TRANSITIONS.

SG-6 TRENCHES SHALL BE VERIFIED FOR SIZE TO MAINTAIN CLEARANCES AROUND REINFORCEMENT PRIOR TO PLACING REINFORCEMENT.

SG-7 PROVIDE 5" THICK CONCRETE SLAB REINFORCED W/ #4 @ 12"o.c. EACH WAY IN TOP, TYPICAL UNLESS NOTED OTHERWISE. SUPPORT MAT AT 4'-0"o.c. EACH WAY WITH CONCRETE BLOCKS OR BRICKS. SUPPORT BOTTOM BEAM REINFORCEMENT AT 4'-0" INTERVALS.

SG-8 GRADE BEAM AND SLAB REINFORCEMENT SHALL BE CONTINUOUS WITH 48 BAR DIAMETER LAP SPLICES.

SG-9 PROVIDE FOUR CORNER BARS AT ALL BEAM CORNERS & T-INTERSECTIONS (2 TOP AND 2 BOTTOM). BARS TO EQUAL SIZE OF SCHEDULED BEAM REINFORCEMENT AND SHALL LAP BEAM REINFORCMENT 48 BAR DIAMETERS.

SG-10 WHERE BEAM DEPTH EXCEEDS 36", ADD #4 @ 12"o.c. IN EACH FACE OF BEAM.

SG-11 CONDUITS IN SLAB SHALL RUN UNDER THE TOP LAYER OF SLAB REINFORCING. PROVIDE A MINIMUM OF 1 1/2" CLEAR BETWEEN CONDUITS AND BETWEEN CONDUITS AND PARALLEL REINFORCING. DO NOT BUNDLE CONDUITS.

CONCRETE NOTES:

CN-1 ALL CONCRETE WORK SHALL BE IN ACCORDANCE WITH THE LATEST EDITION OF ACI 301 "SPECIFICATION FOR STRUCTURAL CONCRETE BUILDINGS" AND ACI 318 "BUILDING CODE REQUIREMENTS FOR REINFORCED CONCRETE."

CN-2 CONSTRUCTION TOLERANCES SHALL CONFORM TO ACI 117 "STANDARD TOLERANCES FOR CONCRETE CONSTRUCTION AND MATERIALS."

CN-3 CONTRACTOR SHALL SUBMIT THE FOLLOWING SHOP DRAWINGS:

REINFORCING STEEL – DETAILING FABRICATION AND ERECTION OF ALL REINFORCING BARS INCLUDING ACCESSORIES IN ACCORDANCE WITH THE LATEST EDITION OF ACI 315 "MANUAL OF STANDARD PRACTICE FOR DETAILING REINFORCED CONCRETE."

CONCRETE MIX DESIGN – FOR EACH TYPE OF CONCRETE TO BE USED BASED ON AGGREGATE SIZE AND CEMENT PROPORTION. MIX DESIGN SHALL INCLUDE CERTIFICATION OF COMPLIANCE WITH SPECIFIED MATERIALS BASED ON FIELD SAMPLES AND COMPRESSION TEST DATA FOR LABORATORY PREPARED TRIAL MIX OR FIELD TEST DATA FOR SPECIFIED MIX. FIELD TEST DATA SHALL BE FROM AN IDENTICAL MIX DESIGN SUPPLIED FROM PROPOSED BATCH PLANT AND SHALL HAVE BEEN PREPARED WITHIN THE PRECEDING SIX MONTHS.

CN-4 CONTRACTOR SHALL DESIGN, CONSTRUCT, ERECT, SHORE, BRACE AND MAINTAIN FORM WORK ACCORDING TO ACI 301. WOOD FORM WORK SHALL BE #2 COMMON OR BETTER PLYWOOD, EXPOSED SURFACES SHALL BE NEW OR LIKE NEW MOISTURE RESISTANT FIR FORM PLYWOOD. LIGHTLY COAT FORMS WITH NON-STAINING FORM OIL, REMOVE SURPLUS OIL.

LEHMANN ENGINEERING, Inc.
1006 Beckett, San Antonio, TX 78213
Ph (210)348-8889
TX Firm Reg. No. F-5298

GENERAL NOTES:

GN-1 THIS STRUCTURE IS DESIGNED IN ACCORDANCE WITH THE INTERNATIONAL BUILDING CODE (2006) AS AMENDED AND ADOPTED BY THE CITY OF BEORNE, TEXAS AND APPLICABLE INDUSTRY STANDARDS (AISC, ACI, ETC.).

GN-2 DESIGN CRITERIA:
DEAD LOADS – THE WEIGHT OF THE MATERIALS FORMING THE PERMANENT PART OF THE BUILDING. A SUPERIMPOSED DEAD LOAD OF 5 PSF HAS BEEN APPLIED FOR MECHANICAL DUCTS, CONDUITS, CEILING, ETC.

LIVE LOADS – IN ACCORDANCE WITH IBC SECTION 1607
FLOORS:
DINING ROOMS AND RESTAURANTS . . . . 100 PSF
ROOFS:
ROOF . . . . 20 PSF
AWNINGS AND CANOPIES . . . . 5 PSF
MECHANICAL EQUIPMENT . . . . AS INDICATED ON PLANS
LIVE LOADS REDUCTIONS – FLOORS IN ACCORDANCE WITH IBC SECTION 1607.9
ROOFS IN ACCORDANCE WITH IBC SECTION 1607.11

WIND LOADS – PER IBC SECTION 1609
ULTIMATE DESIGN WIND SPEED (3 SECOND GUST), V-ult . . . . 115 MPH
NOMINAL DESIGN WIND SPEED, V-asd . . . . 89 MPH
EXPOSURE CATEGORY C
RISK CATEGORY II

SNOW LOADS – PER IBC SECTION 1608 . . . . 5 PSF

EARTHQUAKE LOADS – PER IBC SECTIONS 1613
IMPORTANCE FACTOR 1
OCCUPANCY CATEGORY 11
0.2 SEC SPECTRAL RESPONSE ACCELERATION (Ss) 0.099
1 SEC SPECTRAL RESPONSE ACCELERATION (S_1) 0.027
SITE CLASS . . . . D
0.2 SEC SPECTRAL RESPONSE COEFFICIENT (SDs) 0.106
1 SEC SPECTRAL RESPONSE COEFFICIENT (SD_1) 0.043
SEISMIC DESIGN CATEGORY . . . . A
RESISTING SYSTEM . . . . WOOD SHEAR WALLS
ANALYSIS PROCEDURE . . . . ASCE 7-11.7
RESPONSE COEFFICIENT . . . . N/A
MODIFICATION FACTOR . . . . N/A
BASE SHEAR . . . . N/A

GN-3 THE STRUCTURE HAS BEEN DESIGNED TO RESIST DESIGN LOADS ONLY AS A COMPLETED STRUCTURE. CONTRACTOR SHALL CONSIDER ALL LOADS APPLIED TO THE PARTIALLY COMPLETED STRUCTURE AND PROVIDE TEMPORARY BRACING AS REQUIRED UNTIL ALL PERMANENT CONNECTIONS ARE MADE. ANY PROPOSED APPLICATION OF CONSTRUCTION LOADS WHICH EXCEED THE DESIGN LOADS WILL REQUIRE REANALYSIS AND PROBABLE REDESIGN.

GN-4 THE FOUNDATION DESIGN IS BASED ON THE GEOTECHNICAL ENGINEERING STUDY PREPARED BY PROFESSIONAL SERVICE INDUSTRIES, INC. (PROJECT NO. ____-___, DATED ______ __, ____). THE GEOTECHNICAL ENGINEERING STUDY REPORT INCLUDES OTHER RECOMMENDATIONS THAT EFFECT THE LONG TERM PERFORMANCE OF THE FOUNDATION WHICH ARE BEYOND THE SCOPE OF LEHMANN ENGINEERING'S SERVICES. THE CONTRACTOR AND OWNER SHALL REVIEW THE SOILS REPORT AND IMPLEMENT RECOMMENDATIONS PROVIDED WITH (I.E. LANDSCAPING VEGETATION, ROOT BARRIERS, SITE DRAINAGE, ROOF DRAINS, SOIL MOISTURE MAINTENANCE, ETC.)

GN-5 PRIOR TO START OF CONSTRUCTION, THE CONTRACTOR AND FABRICATOR SHALL VERIFY ALL QUANTITIES, DIMENSIONS AND CONDITIONS AND NOTIFY ARCHITECT/ENGINEER OF ANY DISCREPANCIES BEFORE PROCEEDING WITH THE WORK.

GN-6 VERIFY REQUIREMENTS OF OTHER TRADES (MECHANICAL, ELECTRICAL, ETC.) PRIOR TO PROCEEDING WITH FABRICATION OR INSTALLATION OF MATERIALS.

GN-7 UTILITIES PENETRATING BUILDING SHALL BE FLEXIBLE, USING SLEEVE JOINTS, BENDS, LOOPS, ETC. TO PERMIT MOVEMENTS DUE TO EXPANSIVE UNDERLYING SOILS.

GN-8 THE DETAILS DESIGNATED AS "TYPICAL DETAILS", APPLY GENERALLY TO THE DRAWINGS IN ALL AREAS WHERE CONDITIONS ARE SIMILAR TO THOSE DESCRIBED IN DETAILS.

GN-9 COMPLETED SHOP DRAWINGS SHALL BE PROVIDED FOR FABRICATED ITEMS, REFERENCE INDIVIDUAL SECTIONS FOR SPECIFIC REQUIREMENTS. SUBMIT A MINIMUM OF FOUR COPIES OF EACH SUBMITTAL WITH ADDITIONAL COPIES AS DIRECTED BY THE ARCHITECT. SHOP DRAWINGS SHALL BE REVIEWED BY THE GENERAL CONTRACTOR AND SUBMITTED THROUGH THE ARCHITECT/ENGINEER PRIOR TO FABRICATION. THE STRUCTURAL DRAWINGS ARE COPYRIGHTED AND SHALL NOT BE REPRODUCED FOR SHOP DRAWINGS.

GN-10 CONTRACTOR SHALL NOTIFY ARCHITECT/ENGINEER AT LEAST 24 HOURS IN ADVANCE OF ANY CONCRETE POUR OR OTHER ACTION THAT WILL COVER UP STRUCTURAL ELEMENTS SO THE ENGINEER CAN CONDUCT PERIODIC SITE OBSERVATIONS AS REQUIRED TO PROVIDE A FINAL LETTER OF GENERAL COMPLIANCE TO THE OWNER AND/OR BUILDING AUTHORITY. PERIODIC SITE OBSERVATIONS ARE SOLELY FOR THE PURPOSE OF DETERMINING IF THE WORK IS PROCEEDING IN GENERAL ACCORDANCE WITH THE CONSTRUCTION DOCUMENTS AND ARE NOT INTENDED TO BE A COMPREHENSIVE OR EXHAUSTIVE CHECK OF THE QUALITY AND/OR QUANTITY OF THE WORK. THESE OBSERVATIONS DO NOT CONSTITUTE THE SPECIAL INSPECTION REQUIREMENTS OF THE IBC SECTION 1704.

GN-11 THE ENGINEER SHALL NOT HAVE CONTROL OF, AND SHALL NOT BE RESPONSIBLE FOR, CONSTRUCTION MEANS, METHODS, TECHNIQUES, SEQUENCES, OR PROCEDURES, FOR SAFETY PRECAUTIONS AND PROGRAMS IN CONNECTION WITH THE WORK, FOR THE ACTS OR OMISSION OF THE CONTRACTOR, SUBCONTRACTOR, OR ANY OTHER PERSONS PERFORMING ANY OF THE WORK, OR FOR THE FAILURE OF ANY OF THEM TO CARRY OUT THE WORK IN ACCORDANCE WITH THE CONTRACT DOCUMENTS.

GN-12 THE OWNER SHALL EMPLOY AN INDEPENDENT TESTING LABORATORY TO PERFORM CONSTRUCTION MATERIALS TESTING FOR THE PROJECT. REFERENCE SPECIFIC SECTIONS FOR TESTING REQUIREMENTS. THE CONTRACTOR SHALL NOTIFY THE OWNER OF THIS REQUIREMENT AND COORDINATE THESE SERVICES AS NECESSARY THROUGHOUT THE PROCESS OF CONSTRUCTION.

STRUCTURAL EARTHWORK FOR GRADE SUPPORTED FOUNDATIONS:

SE-1 THE CONCRETE FOUNDATION WAS DESIGNED FOR A BUILDING PAD WITH A MAXIMUM PVR OF 1". THE BUILDING PAD WAS DESIGNED AND RECOMMENDATIONS PREPARED BY PROFESSIONAL SERVICE INDUSTRIES, INC. OF SAN ANTONIO IN REPORT NO. 0312-1279 (JANUARY 22, 2014). BUILDING PAD CUT AND FILL RECOMMENDATIONS FOR A 1" PVR HAVE BEEN REPRODUCED BELOW FOR CONVENIENCE. THE SOILS REPORT ALSO INCLUDES OTHER RECOMMENDATIONS THAT EFFECT THE LONG TERM PERFORMANCE OF THE FOUNDATION WHICH ARE BEYOND THE SCOPE OF LEHMANN ENGINEERING'S SERVICES. THE CONTRACTOR AND OWNER SHALL REVIEW THE SOILS REPORT AND IMPLEMENT RECOMMENDATIONS PROVIDED WITHIN (I.E. LANDSCAPING VEGETATION, ROOT BARRIERS, SITE DRAINAGE, BUILDING PAD DRAINAGE SYSTEMS, ROOF DRAINS, SOIL MOISTURE MAINTENANCE, ETC.)

SE-2 BEFORE ANY CONSTRUCTION IS BEGUN, PERFORM ROUGH GRADING AND CUT SWALES SO THAT GROUNDS WILL DRAIN AWAY FROM THE BUILDING. MAINTAIN DRAINAGE DURING ALL PHASES OF CONSTRUCTION SO THAT STORM WATER WILL BE CONDUCTED AWAY FROM THE BUILDING. KEEP EXCAVATIONS PUMPED FREE OF STORM WATER AT ALL TIMES.

SE-3 PRECAUTIONS SHALL BE TAKEN TO PROTECT OPEN EXCAVATIONS FROM EXCESSIVE LOSS OR GAIN IN NATURAL MOISTURE LEVEL PRIOR TO PLACEMENT OF BASE MATERIAL. KEEP MOIST DURING DRY WEATHER AND KEEP STORM WATER PUMPED OUT, INCLUDING NIGHTS AND WEEKENDS, DURING RAINS.

SE-4 IN THE AREA OCCUPIED BY THE FOUNDATION, PLUS 5'-0", REMOVE ALL ORGANIC MATERIALS, ROOTS, ETC. FROM THE SITE. DO NOT USE FOR UNDER FLOOR FILL. REMOVE ADDITIONAL MATERIAL AS NECESSARY TO PROVIDE A MINIMUM OF 1'-0" OF SELECT FILL.

SE-5 THE RESULTING SURFACE SHALL BE PROOF ROLLED WITH A SUFFICIENTLY HEAVY ROLLER (20 TONS) TO LOCATE AND DENSIFY WEAK AND COMPRESSIBLE ZONES. A MINIMUM OF 6 PASSES OF THE ROLLER IS RECOMMENDED. ANY SOFT SPOTS SHALL BE REMOVED AND REPLACED WITH COMPACTED SELECT FILL.

SE-6 THE SUB GRADE SHALL BE SCARIFIED JUST PRIOR TO FILL PLACEMENT TO A MINIMUM DEPTH OF 8" AND RECOMPACTED TO MINIMUM OF 95% OF THE MAXIMUM DENSITY AS DETERMINED BY ASTM D698 COMPACTION TEST, MAINTAINING MOISTURE CONTENT BETWEEN 0 AND +4 PERCENTAGE POINTS UNTIL COVERED.

SE-7 SELECT FILL SHALL CONFORM TO TxDOT SPECIFICATIONS, ITEM 247, TYPE "A" GRADE 2. NO DIRT FILL SHALL BE USED UNDER THE BUILDING FOUNDATION. SUBMIT WRITTEN CERTIFICATION OF COMPLIANCE WITH TxDOT, ITEM 247 SPECIFICATIONS BY TEST PERFORMED ON FIELD EXAMPLES. OR AS APPROVED BY PROJECT GEOTECH.

SE-8 FOR A DISTANCE OF 5'-0" OUTSIDE OF THE BUILDING LINE, AND BEGINNING AT THE LOW END, BUILD UP TO THE ELEVATION OF THE BOTTOM OF THE SLAB WITH SELECT FILL. REFERENCE SE-4 FOR MINIMUM FILL THICKNESS REQUIREMENTS. ALL FILL SHALL BE PLACED IN 8" LOOSE HORIZONTAL LIFTS AND COMPACTED TO A MINIMUM OF 95% OF THE MAXIMUM DENSITY AS DETERMINED BY TxDOT TEX-113-E COMPACTION TEST.

SE-9 PERFORM ALL EARTHWORK DESCRIBED ABOVE BEFORE TRENCHING FOR GRADE BEAMS OR MECHANICAL LINES.

SE-10 EXCESS FILL AT BUILDING PERIMETER SHALL BE CUT AND GRADED TO COMPLY WITH FINISHED GRADE REQUIREMENTS INCLUDING PLANTING SOIL OVER A 1'-0" THICK IMPERVIOUS CLAY LINER (CLEAN CLAY WITH P.I.>35) FOR A DISTANCE OF 5'-0" FROM BUILDING LINE, INCREASE AS REQUIRED TO COMPLETELY CAP SELECT FILL. FINISH GRADE SHALL PROVIDE PERMANENT DRAINAGE AWAY FROM BUILDING. PLACE IN 8" THICK LOOSE LIFTS AND COMPACTED TO A MINIMUM OF 90% OF THE MAXIMUM DRY DENSITY PER ASTM D698.

SE-11 OWNER SHALL EMPLOY GEOTECHNICAL ENGINEER TO VERIFY EXCAVATION DEPTH AND TAKE DENSITY TESTS OF RECOMPACTED SCARIFIED MATERIAL AND DENSITY TESTS OF EACH LIFT OF SELECT FILL, AT THE RATE OF ONE TEST PER EACH 3,000 SQ. FT. WITH A MINIMUM OF THREE (3) TESTS PER LIFT.

DURAND-HOLLIS RUPE ARCHITECTS, INC.
14603 HUEBNER RD.
BUILDING 18
SAN ANTONIO, TEXAS 78230
TEL. 210 308-0080
FAX. 210 697-3309
eMAIL OFFICE@DHRARCHITECTS.COM

REVISED ISSUE DATES:
________ 1
________ 2
________ 3

BUSH'S CHICKEN !
1550 STATE HWY 46
BOERNE, TX.

NOTES, DETAILS, & SECTIONS

THIS DRAWING IS PROVIDED AS AN INSTRUMENT OF SERVICE BY THE ARCHITECT AND IS INTENDED FOR USE ON THIS PROJECT ONLY. THE DRAWING REMAINS THE PROPERTY OF THE ARCHITECT AND SHALL BE RETURNED TO HIM/HER UPON COMPLETION OF THE CONSTRUCTION WORK. PURSUANT TO THE ARCHITECTURAL WORKS COPYRIGHT PROTECTION ACT OF 1990, ALL DRAWINGS, SPECIFICATIONS, IDEAS AND DESIGNS, INCLUDING THE OVERALL FORM, ARRANGEMENT AND COMPOSITION OF SPACES AND ELEMENTS APPEARING HEREIN, CONSTITUTES THE COPYRIGHTED WORK OF THE ARCHITECT. ANY REPRODUCTION, USE, OR DISCLOSURE OF INFORMATION CONTAINED HEREIN WITHOUT PRIOR WRITTEN CONSENT OF THE ARCHITECT IS STRICTLY PROHIBITED.
© 2016

PROJECT NO. 15-083
ISSUE DATE: 01-28-16
DRAWN BY: AR
REVIEWED BY: AS
PROJECT ARCHITECT:
GABRIEL DURAND-HOLLIS, FAIA
TEXAS LICENSE NO. 10881

S1.0